□□□ □□ □□ □□□ □□□□ □□□ □□□ □□□ □□□□ □□□□ □ □□□□□.□□□ □□ □ □ □□ □□□□, □□, □□ □□□□ □□□□□ □□ □□ □□□□ □□□ □□□□□ □□□ □□□□□□ □ □□□□□.

□□□ □□ : EN1092-2 / BS4504

□□ □□ : DIN F4 / DIN F5 / BS 5163

DESIGN FEATURES

Features

- Use AkzoNobel material.
- Super Anti-corrosion
- Epoxy powder coating 200-250um,
- Baking varnish over 200℃,

NO.		
1	Body	GGG50
2	Dise	GGG40+EPDM
3	Wedge nut	C48600
4	Stem	SS431
5	Bonnet	GT450-10
6	Gasket	EPDM
7	Y-ring	EPDM85-90
8	Fix ring	CuZn21Si3/C69300
9	Thrust bearing	C69300
10	Seal ring	EPDM70
11	O ring	NBR
12	Retainer ring	POM
13	Bushing ring	POM
14	Gland	SS431
15	Dustproof ring	EPDM85
16	Dise core	GGG40
17	Bolt	SS316

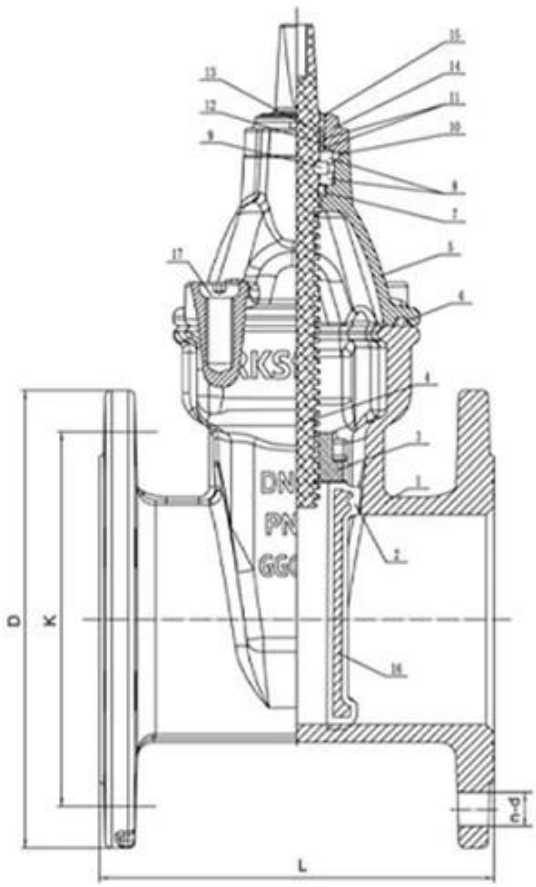

Free wedge nut, **reduces the stem bending forces** and at the same time enables it to be easily replaced.

The more compact new cap, reduces the water retention areas in order **to reduce the risk of bacterial growth**.

One piece stainless steel stem in for **better resistance to axial load and to with stand higher operating torques**.

Three locking tab for bayonet system prevents self-dismantling.

Dust guard integrating three O-ring shape, **prohibiting the introduction of foreign** bodies at the stem.

Male guiding system with composite sliding skate reduces the wear of the wedge against the body, allowing a smooth functionality and a longer life time of the valve.

Triple seal at the operating stem to ensure tightness with the test of time (2500 cycles).

New male composite sliding skate technology ensuring a low operating torque even under high differential pressure and preventing damage or corrosion generated by the friction.

APPLICATION SCENARIO

Industrial water application | Power plant | Sea water desalination | Water treatment | Water supply and drainage | HAVC | Food and drug | Water transport

COMPANY FACTORY

COMPANY INFORMATION

i □□□□ □□ : □□ □□ □□, □□ □ □□ □□ □□.

CNC □□ □□, □□ □□ □, □□□□ □□ □□, □□ □□ □□ □ □□.

□ □□ □□ □□ □□□ □□□ □□□□□□ □□□ □□ □□ □□.

□□□ □□□□ □□□ □□□□ □□ □□ □□□ □□□□□□.

v □□ □□ : GB, □□ □□, □□ □□, TUV CE, ISO 9001, ADWO-2000, TS, PED, WRC WRAS, KTW, API 6D, API609.

VI □□ □□□□ : □□ □□, □ □□, □□□ □□, □□ □□, □□□ □□, □□□ □□, □□ / □□ / □□ □□□□□, □□ □□.

01
21 years of professional experience
02
4 factories
03
Independent research and development team
28 top senior professional researchers
04
2 professional testing centers
05
100% high level ex-factory inspection
06
High quality imported materials
07
2 years quality assurance, repair and replacement

COMPANY QUALIFICATION

COMPANY EXHIBITION

Partners

□□aq

Q : □□□ □□□ □□ □□ □□□ □□□□□?
A : □□□ □□, □□, □□, □□, □□ □□□.

Q : □□□□□□ □□ □ □ □□□□?
A : □□, □□, hrdraulic, □□□□□ □□.RKSfluid □□□□□□ □□ □□□ □□□□□.□□□ □□□ □□ □□ □□□□ □ □□□□.

Q : □□ □□□ □□□□□?
A : RKSfluid□□ □□□ □□□ □□ □ □□□ 4 □□ □□□□ □□□□.

Q : □□ □□ □□
A : □□ □□□ 2 ~ 5 □□□□ □□□ □□□□.□□□ □□□ □□ □□□ □□.

Q : MOQ
A : □□ □□□ □□ 1pc.

Q : □□ □□□ □□□□□?
A : □□ □ 100% □□ □□□, 2 □ □□.□□□□ □□□□ □□□□□□.
□□□ TUV, API, WRA, CE, ISO □□□ □□□□□.
□□□ DIN, ASME, BS EN, JIS, API, AWWA□ □□□□□.

Q : □□□□ □□□ □□□□ □□□ □□ □ □ □□□□?
A : RKSfluid □□□ 20 □ □□□ 70 □ □□□ R & D □□□□□ □□ □□, □□ □□ □ □□ □□□ □□□□□.