Air Release valve

Size range:DN25-DN300
Pressure ratings:PN10 PN16
Body:Ductile Iron
Trim:SS304 SS316 etc
Connection:ARVS/KARS-BPT threaded, KARX-Flanged
Working temperature: -10℃~+80℃

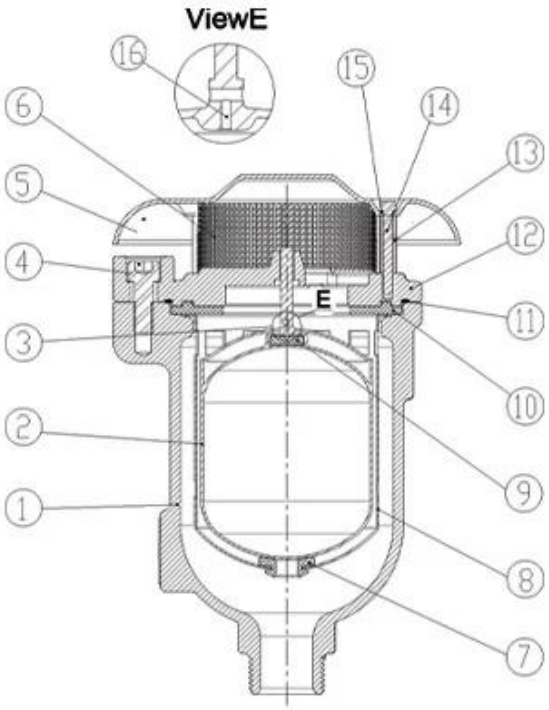

DN25-DN50

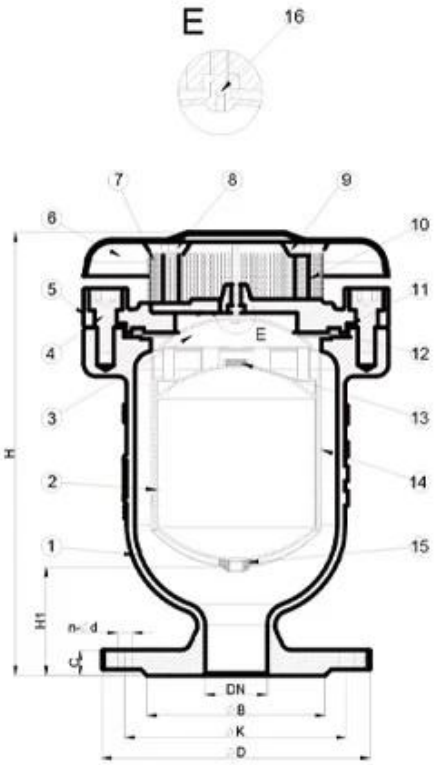

DN50-DN300

□□:
1. □□□ □□□□□□ □□□□ □□□□ □□□□ □ □□ □ □□ □□ □□ □□ □□□ □□□□□□ □□ □□□. 2. □□ □□□□ □□ □□□□ □ □□ □□ □□ □□ □□□ □□□ □□ □□□□ □□ □□□ □□□□. 3. □□ □□□□□ Bottom □□ □□□ □□ □□□□ □□□ □□□ □□□ □□□□ □□ □□□□□.□□ □□□ □□□□□ □□□□ □ □□□ □□ □□□□□. 4. □□□□ □□, □□, □□ □□□ □□□□□□ □ □□ □□□ □□□□ □□□□. 5.comply bs en 1074-4

COMPANY INFORMATION

RKSfluid□ 1997 □□ □□□□□□□. □□□ Foundry□□□, □□ □□ □□ □ □□ □□ □□.□□□□□□ CNC □□ □□, □□ □□ □, □□□□ □□□□□ □□□□.□□ □□, □□ □□ □ □□ □□.□□□ □□□□□□ □□ □□□□□□.□□ □□.□□ □□□ □□□ □□□ □□□□□ □□□ □□□ □□Liaoning Province, □□ □□ □□ □□□ □□ GB□□□ □□□□□.□□ □□ □□ □□□ □□□□.□□□□ □□□□ □□□□ □ □□ □□□ □□ □ RK□ □□□ □□□□ □□□□, □□, □□□ □ □□ □□.□□□ □□ □□□ □□□□.

□□□ □□ □□ □□□□ : GB, ISO, □□□ □ □□ □□, CE □ ADWO-2000 □ TUV□ □□□□□□.ISO9001, TS, API.

□□□ □□ : □□, □□ □ □□ □□ □ □□,□□ □□□ □□□ □□.□□, □□ □□ □□□ □□□□□□.

□□ □□□ : □□ □□, □□, □□□, □□, □□ □□, □□ □□ □, □□□ □□□,□□□ □□□□□.

□□□□ □□ □□ □□□ □□□□ □□□ □□□□ □□□□."□□ □ □□, □□□ □□ □ □□□□ □□"□ □□□□□□□ □□ □□.

□□ □□□ □□□ □□ □□□□□!

i □□□□ □□ : □□ □□ □□, □□ □ □□ □□ □□.

CNC □□ □□, □□ □□ □, □□ □□, □□ □□ □□ □ □□.

□ □□ □□ □□ □□□ □□□ □□□□□□ □□□ □□ □□ □□.

□□□ □□□□ □□□ □□□□ □□ □□ □□□ □□□□□□.

v □□ □□ : GB, □□ □□, □□ □□, TUV CE, ISO 9001, ADWO-2000, TS, PED, WRC WRAS, KTW, API 6D, API609.

VI □□ □□□□ : □□ □□, □ □□, □□□ □□, □□ □□, □□□ □□, □□□ □□, □□ / □□ / □□ □□□□□, □□ □□.

01
21 years of professional experience
02
4 factories
03
Independent research and development team
28 top senior professional researchers
04
2 professional testing centers
05
100% high level ex-factory inspection
06
High quality imported materials
07
2 years quality assurance, repair and replacement

COMPANY QUALIFICATION

COMPANY EXHIBITION

Partners
TALIS
GEMÜ
WATTS
Bray
hawle
amri
BAYARD
AVK
EBRO
KEYSTONE
EMERSON
GIBSON
CAMERON
CMO VALVES
SWISS fluid
SAINT-GOBAIN
KSB
tyco
TTV
SAPAG
haike

Delivery
ups
XDL
FedEx Express
EMS
TNT
DHL
Payment
PayPal
WESTERN UNION
VISA
ESCROW
MasterCard
HSBC

□□□□ □□:

Q : □□□ □□□ □□ □□ □□□ □□□□□?

A : □□□ □□, □□, □□, □□, □□ □□□.

Q : □□□□□□ □□ □ □ □□□□?

A : □□, □□, hrdraulic, □□□□□ □□.RKSfluid □□□□□□ □□ □□□ □□□□□.□□□ □□□ □□ □□ □□□□ □ □□□□.

Q : □□ □□□ □□□□□**?**

A : RKSfluid□□ □□□ □□□ □□ □ □□□ 4 □□ □□□□ □□□□.

Q : □□ □□ □□

A : □□ □□□ 2 ~ 5 □□□□ □□□ □□□□.□□□ □□□ □□ □□□ □□.

Q : MOQ

A : □□ □□□ □□ 1pc.

Q : □□ □□□ □□□□□**?**

A : □□ □ 100% □□ □□□, 2 □ □□.□□□□ □□□□ □□□□□□.

□□□ TUV, API, WRA, CE, ISO □□□ □□□□□.

□□□ DIN, ASME, BS EN, JIS, API, AWWA□ □□□□□.

Q : □□□□ □□□ □□□□ □□□ □□ □ □ □□□□**?**

A : RKSfluid □□□ 20 □ □□□ 70 □ □□□ R & D □□□□□ □□ □□, □□ □□ □ □□ □□□ □□□□□.