□□:

1. □□□□ □□□□ □□ □□ □□□ □□ □□ □ □□□ □□□ □□□□□.

2. □□ □□
□□ □□□ □□ □□□ □□ □□□ □□□ □□□□□. □□□□□ □□□ □□□ □□□□ □□ □□□ 3□ □□□□ □□□ □□□ □□□ □□□ □ 75%□ □□□□.

3. □□□
□□□□□ □□□ □/□□ □□□ □ □□□□□ □□□ □ □□□□. □□□ □□□ □□ □□□□□ □□□□□. □□□□□ □□□ □□ □□□ □□ □□□ □□□□ □□ □□ □□□□ □□ □□□ □ □□□□.

4. □□
□□□□□ □□□ □□□ □□□ □□□ □□ □□□ □□□ □□□□. □□ □□ 10□□ □□□□□ □□□ □□□ □□□ 10□□ □□□ □□□ 1/9□ 1/6□□□. □□□ □□□ □□ □□□ □□□ □□□□ □□ □□□□ □□□ □□□□□□.

5. □□ □□□
□□ □□ □□ □□□ □□ □□□□□ □□□ □□ □□ □□□ □□ □□□ □□□ □□ □□ □□□ □□□□□.

6. □□□ □□□
□□□□□ □□□ 90□ □□ □ □□ □□□ □□□□□.

7. □□□□
□□□□ □□□ □□□□□ □□□ □□ □□ □□□ □□□ □□□□ □□□ □□□ □□ □□ □□□□ □□□□.

DESIGN FEATURES

DURABLE

- No-pin connection, 1 pc blow-out proof stem
- DI/CI Nodularity over 95%

ANTI-CORROSION

- Material: Epoxy powder: AkzoNobel, Earth Best!
- Coating Thickness: 200-250μm
- Spraying temp: over 200℃. Doesn't fade, even wipe with diethyl ether

QUALITY STANDARD

- 100% quality test, follow DIN, ASTM, JIS, GB/T, ISO, BS EN, API
- ONLY ONE Manufacturer get CE certification up to DN1800
- 2 years warranty. 15000 times On-off test, 30000 times Destructive experiment

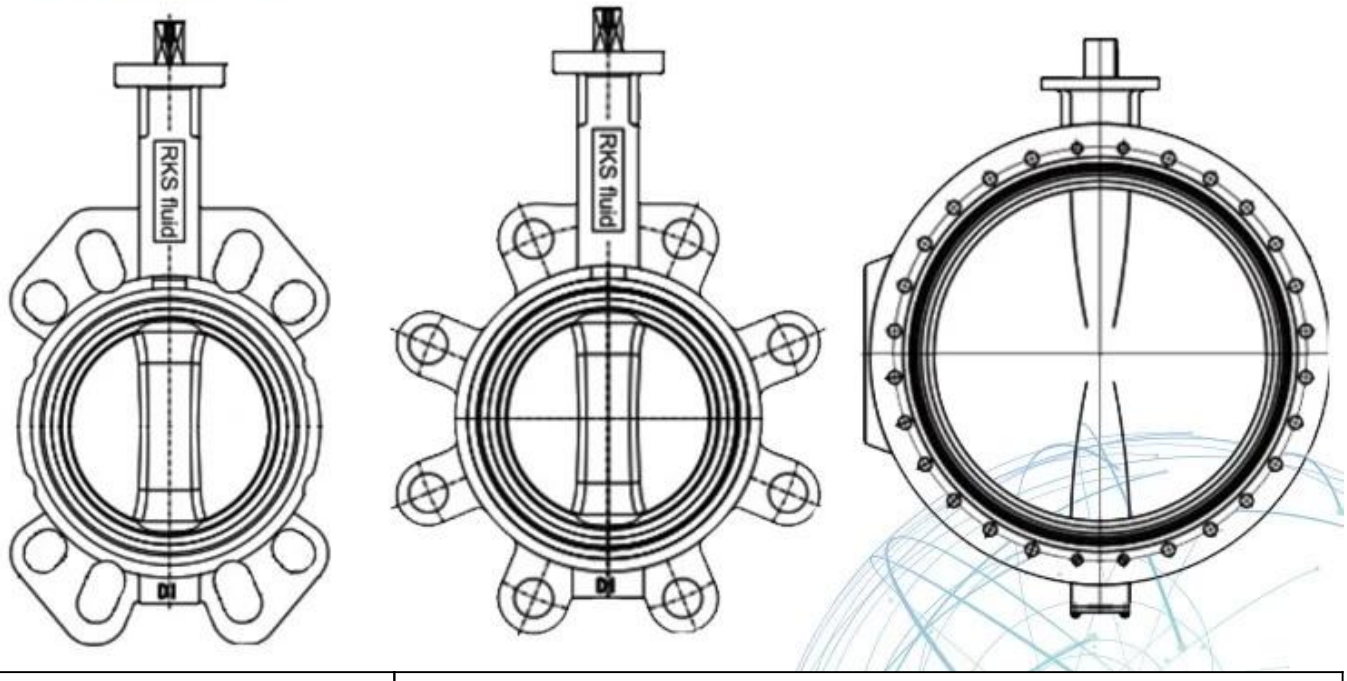

□□	DN32 - DN2400(NPS1 1/4-NPS96)
□□ □□	PN6 - PN10 - PN16(□□□ 150)
□□ □□	-40℃-120℃
□□	□□□ □□ □, □□□□□ □.
□□ □□	NBR, EPDM, □□□□, □□□, □□□

□□	□□□, □□, U-□□, □□ □□□

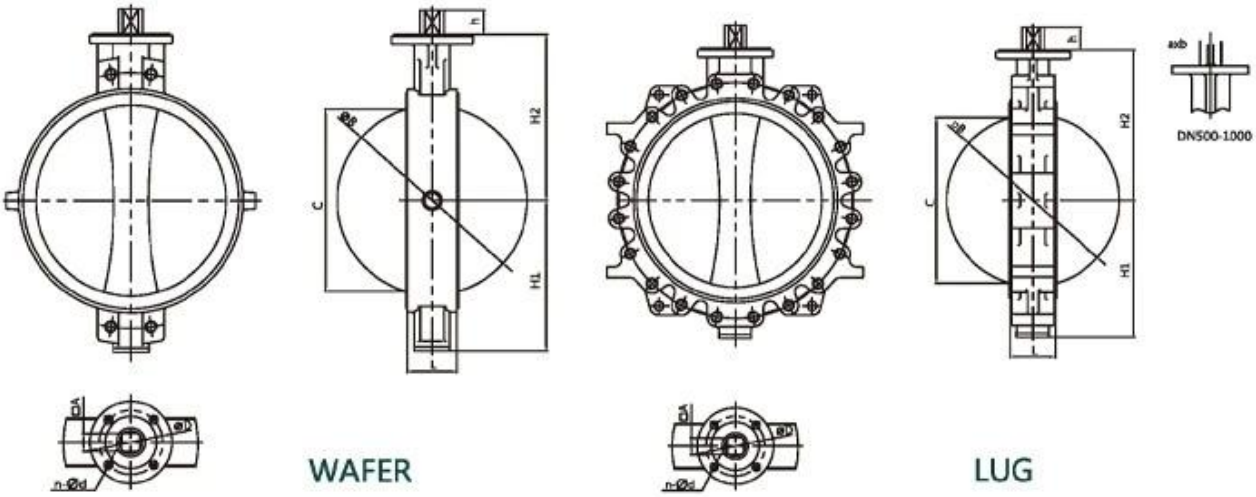

NPS14-NPS40 Wafer/Lug with alignment holes													
Size	L	H1	H2	h	A	ΦB	C	ΦG	a	b	ΦD	n-Φd	IS05211
NPS14	3.07	10.63	11.81	1.42	1.06	Φ13.31	12.95	-	-	-	Φ4.92	4-Φ0.55	F12
NPS16	4.02	11.81	13.58	1.69	1.26	Φ15.35	14.80	-	-	-	Φ5.50	4-Φ0.71	F14
NPS18	4.49	12.99	14.76	1.93	4.42	Φ17.20	16.61	-	-	-	Φ5.50	4-Φ0.71	F14
NPS20	5.00	15.16	16.73	2.56	-	Φ19.09	18.43	Φ2.36	0.71	2.52	Φ6.50	4-Φ0.87	F16
NPS24	6.06	17.24	19.49	2.76	-	Φ23.03	22.24	Φ2.36	0.71	2.52	Φ6.50	4-Φ0.87	F16
NPS28	6.50	20.39	22.44	3.15	-	Φ26.77	25.98	Φ2.76	0.79	2.93	Φ10.00	8-Φ0.71	F25
NPS30	6.50	21.46	24.02	3.15	-	Φ28.74	27.95	Φ2.76	0.79	2.93	Φ10.00	8-Φ0.71	F25
NPS32	7.48	22.32	25.20	3.15	-	Φ30.43	29.49	Φ2.76	0.79	2.93	Φ10.00	8-Φ0.71	F25
NPS36	7.99	25.59	27.56	3.94	-	Φ34.49	33.54	Φ3.15	0.87	3.35	Φ10.00	8-Φ0.71	F25
NPS40	8.50	28.15	29.53	3.94	-	Φ38.43	37.48	Φ3.15	0.87	3.35	Φ11.73	8-Φ0.87	F30

APPLICATION SCENARIO

Industrial water application | Power plant | Sea water desalination | Water treatment | Water supply and drainage | HAVC | Food and drug | Water transport

COMPANY INFORMATION

I □□□□: □□□□ □□, □□ □ □□□□ □□.

II □□ CNC □□□ □□, □□ □□□□ □, □□□□ □□ □□, □□ □□ □□ □ □□.

III □□□ □□ □□ □□, □□ □□ □□ □□ □□□ □□□□□.

VI □□ □□□□ □□□□ □□□□□□□ □□□□□□□.

V □□ □□: GB, □□ □□, □□ □□, TUV CE, ISO 9001, ADWO-2000, TS, PED, WRC WRAS, KTW, API 6D, API609.

VI □□ □□: □□ □ □□, □ □□, □□□ □□, □□ □□, □□□ □□, □□□ □□, □□/□□/□□ □□□□□, □□ □□.

RKSfluid
Proven Technology-Superior Features-Legendary Value

RKSfluid
Proven Technology-Superior Features-Legendary Value

RKSfluid
Proven Technology-Superior Features-Legendary Value

RKSfluid
Proven Technology-Superior Features-Legendary Value

RKSfluid
Proven Technology-Superior Features-Legendary Value

RKSfluid
Proven Technology-Superior Features-Legendary Value

01
21 years of professional experience
02
4 factories
03
Independent research and development team
28 top senior professional researchers
04
2 professional testing centers
05
100% high level ex-factory inspection
06
High quality imported materials
07
2 years quality assurance, repair and replacement

COMPANY QUALIFICATION

COMPANY EXHIBITION

□□□□ □□:

Q: □□□ □□□ □□ □□ □□□ □□□□□?
□: □□" □□, □□, □□, □□, □□ □□□.

Q: □□ □□□□ □□ □□□□□□ □□□ □ □□□□?
□: □□□, □□□, □□□, □□□□□ □□. RKSfluid □□□□□□ □□ □□□ □□□□□. □□□ □□ □□□□ □□□□□.

Q: □□□ □□ □□□ □□□□□?
□: RKSfluid □□□ □□□ □□ □□□ □□□ □ □□ 4□□ □□□ □□□□.

Q: □□ □□□□
□: □□ □□□ □□□ □□ 2~5□ □□□ □□□ □□□□. □□□ □□□ □□ □□□ □□□ □□□□□.

□□: MOQ
A: □□ □□□ □□ 1pc.

Q: □□ □□□ □□□□□**?**
A: □□ □ 100% □□ □□□, □□ 2□. □□□ □□ □□□ □□□□□□.
□□□ TUV, API, WRAS, CE, ISO □□□ □□□□□.
□□□ DIN, ASME, BS EN, JIS, API, AWWA□ □□□□□.

Q: □□□□ □□□ □□□ □□□□ □□□ □ □□□**?**
A: RKSfluid 27□□ □□□ □□□□ □□□ 70□ □□□ R&D □□□□□ □□ □□, □□ □□ □ □□ □□□ □□□□□.