- Streamlined, minimum noise
- Backflow velocity only 0.2s, Head loss 0.1bar with 2m/s
- EPDM/NBR Rubber fully coated disc
- Anti-erosion design, Self-adjusting ball
- Self-cleaning stem, Long time smooth operation

Engineering Projects

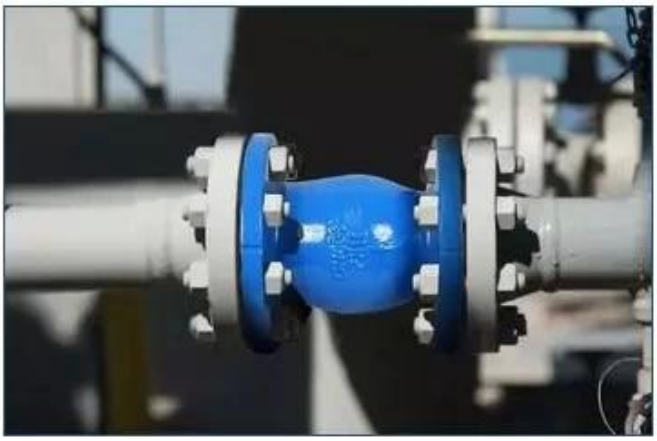

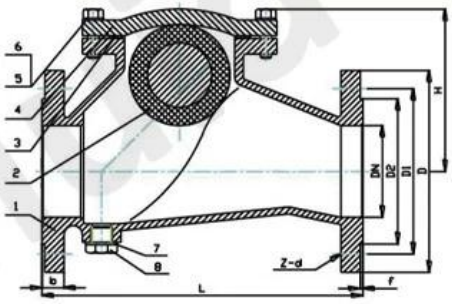

Ball Check Valve, Flange

ITEM	PART NAME	MATERIAL
1	Body	Ductile iron
2	Ball	NBR
3	Gasket	NBR
4	Body	Ductile iron
5	Bolt	SS304
6	Washer	SS304
7	Washer	Nylon
8	Plug	SS304

SIZE	DIN 3202 F6	Flange dimension(EN 1092-2) PN10/PN16		
DN	L	D	K	n-d
DN40/1.5"	180	150	110	4-ø19
DN50/2"	200	165	125	4-ø19
DN65/2.5"	240	185	145	4-ø19
DN80/3"	260	200	160	8-ø19
DN100/4"	300	220	180	8-ø19
DN125/5"	350	250	210	8-ø19
DN150/6"	400	285	240	8-ø23
DN200/8"	500	340	295/295	8-ø23/12-ø23
DN250/10"	600	405	350/355	12-ø23/12-ø28
DN300/12"	700	460	400/410	12-ø23/12-ø28
DN4O0/16"	900	580	515/525	16-ø28/16-ø31
DNS00/20"	1100	715	620/650	20-ø28/20-ø34

RKSfluid®

Product Display

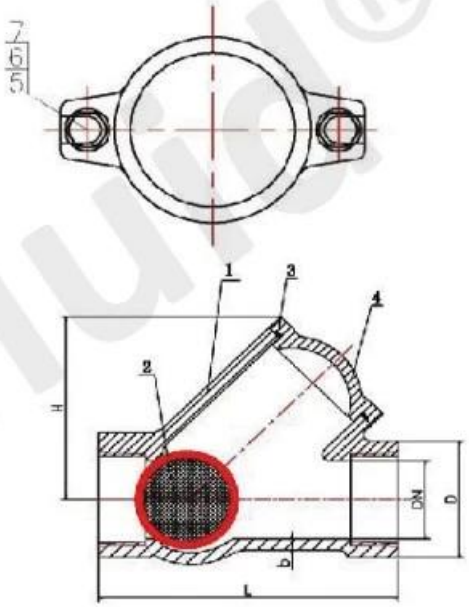

Ball Check Valve, Threaded

ITEM	PART NAME	MATERIAL
1	Body	Ductile iron
2	Ball	NBR
3	O-Ring	NBR
4	Cover	Ductile iron
5	Gasket	SS304

SIZE	DIN 3202 F6	Flange dimension(EN 1092-2) PN10/PN16		
DN	L	D	H	B
DN25	135	50	75	6
DN32	135	50	75	6
DN40	145	60	93	6
DN50	175	72	106	7
DN65	200	90	131	7

RKsfluid®

Company Advantages

01 21 years of professional experience

02 4 factories

03 Independent research and development team
28 top senior professional researchers

04 2 professional testing centers

05 100% high level ex-factory inspection

06 High quality imported materials

07 2 years quality assurance, repair and replacement

COMPANY INFORMATION

i □□□□ □□ : □□ □□ □□, □□ □ □□ □□ □□.

CNC □□ □□, □□ □□ □, □□□□ □□ □□, □□ □□ □□ □ □□.

▪ □□ □□ □□ □□□ □□□ □□□□□□ □□□ □□ □□ □□.

□□□ □□□□ □□□ □□□□ □□ □□ □□□ □□□□□□.

v □□ □□ : GB, □□ □□, □□ □□, TUV CE, ISO 9001, ADWO-2000, TS, PED, WRC WRA, KTW, API 6D, API609.

VI □□ □□□□ : □□ □□, □ □□, □□□ □□, □□ □□, □□□ □□, □□□ □□, □□ / □□ / □□ □□□□□, □□ □□.

Exhibition Photos

□□□□ □□

Q : □□□ □□□ □□ □□ □□□ □□□□□?
A : □□□ □□, □□, □□, □□, □□ □□□.

Q : □□□□□□ □□ □ □ □□□□?
A : □□, □□, hrdraulic, □□□□□ □□. RKSfluid □□□□□□ □□ □□□ □□□□□. □□□ □□□ □□ □□ □□□□ □ □□□□.

Q : □□ □□□ □□□□□?
A : RKSfluid□□ □□□ □□□ □□ □ □□□ 4 □□ □□□ □□□□.

Q : □□ □□ □□
A : □□ □□□ 2 ~ 5 □□□□ □□□ □□□□. □□□ □□□ □□ □□□ □□.

Q : MOQ
A : □□ □□□ □□ 1pc.

Q : □□ □□□ □□□□□?
A : □□ □ 100% □□ □□□, 2 □ □□. □□□□ □□□□ □□□□□□.
TUV, API, WRA, CE, ISO □□□ □□□□□.
□□□ DIN, ASME, BS EN, JIS, API, AWWA□ □□□□□.

Q : □□□□ □□□ □□□□ □□□ □□ □ □ □□□□?

A : RKSfluid □□□ 20 □ □□□ 70 □ □□□ R & D □□□□□ □□ □□, □□ □□ □ □□ □□□ □□□□□.