DESIGN FEATURES

1.Elastic stainless steel sealing ring,"0"leakage

2.Fireproof structural design,blow-out proof stems

3.Auto welding plasma powder surfacing valve seat

4.Hollow design,reduces flow resistance

5.Interchangeable DSS entity seal / multiple-piece

6.stainless and graphite seal

7.ISO5211 Mounting platform,simple connection

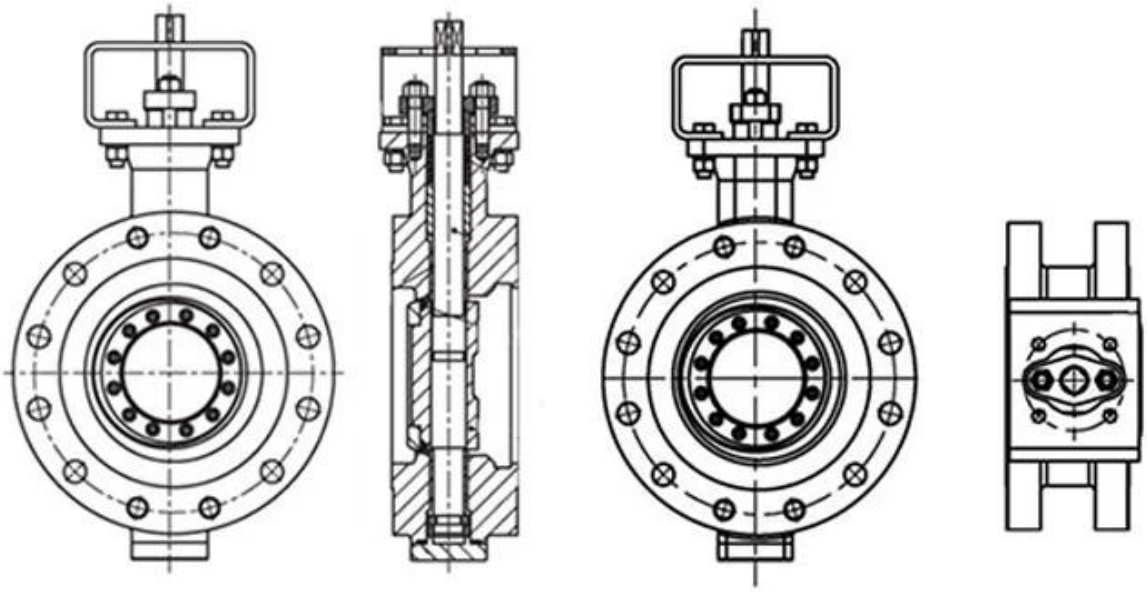

APPLICATION SCENARIO

Industrial water application | Power plant | Sea water desalination | Water treatment | Water supply and drainage | HAVC | Food and drug | Water transport

COMPANY INFORMATION

i □□□□ □□ : □□ □□ □□, □□ □ □□ □□ □□.

CNC □□ □□, □□ □□ □, □□□□ □□ □□, □□ □□ □□ □ □□.

▪ □□ □□ □□ □□□ □□□ □□□□□□ □□□ □□ □□ □□.

□□□ □□□□ □□□ □□□□ □□ □□ □□□ □□□□□□.

v □□ □□ : GB, □□ □□, □□ □□, TUV CE, ISO 9001, ADWO-2000, TS, PED, WRC WRA, KTW, API 6D, API609.

VI □□ □□□□ : □□ □□, □ □□, □□□ □□, □□ □□, □□□ □□, □□□ □□, □□ / □□ / □□ □□□□□, □□ □□.

COMPANY QUALIFICATION

COMPANY EXHIBITION

□□□□ □□

Q : □□□ □□□ □□ □□ □□□ □□□□□?
A : □□□ □□, □□, □□, □□, □□ □□□.

Q : □□□□□□ □□ □ □ □□□□?
A : □□, □□, hrdraulic, □□□□□ □□. RKSfluid □□□□□□ □□ □□□ □□□□□. □□□ □□□ □□ □□ □□□□ □ □□□□.

Q : □□ □□□ □□□□□?
A : RKSfluid□□ □□□ □□□ □□ □ □□□ 4 □□ □□□ □□□□.

Q : □□ □□ □□
A : □□ □□□ 2 ~ 5 □□□□ □□□ □□□□. □□□ □□□ □□ □□□ □□.

Q : MOQ
A : □□ □□□ □□ 1pc.

Q : □□ □□□ □□□□□?
A : □□ □ 100% □□ □□□, 2 □ □□. □□□□ □□□□ □□□□□□.
TUV, API, WRA, CE, ISO □□□ □□□□□.
□□□ DIN, ASME, BS EN, JIS, API, AWWA□ □□□□□.

Q : □□□□ □□□ □□□□ □□□ □□ □ □ □□□□?
A : RKSfluid □□□ 20 □ □□□ 70 □ □□□ R & D □□□□□ □□ □□, □□ □□ □ □□ □□□ □□□□□.