DESIGN FEATURES

TECHNICAL REQUIREMENT

1.Design standard:BS 5163.
2.Face to face:BS 5163.
3.Flanges standard:BS EN1092-2:1997 PN16.
4.Test standard:BS EN12266-1 Rate B.

FEATURES

- Double flange metal seated gate valve
- Size Range:DN50-DN2000
- Standard-ISO/BS/DIN/AWWA/API
- Tests Standard-BS EN 12266-1
- Body Ring-Bronze/SS420/SS304/SS316
- Body-Ductile Iron /Cast Iron/Stainless Steel /WCB
- Fusion bonded epoxy coating-min 300 microns

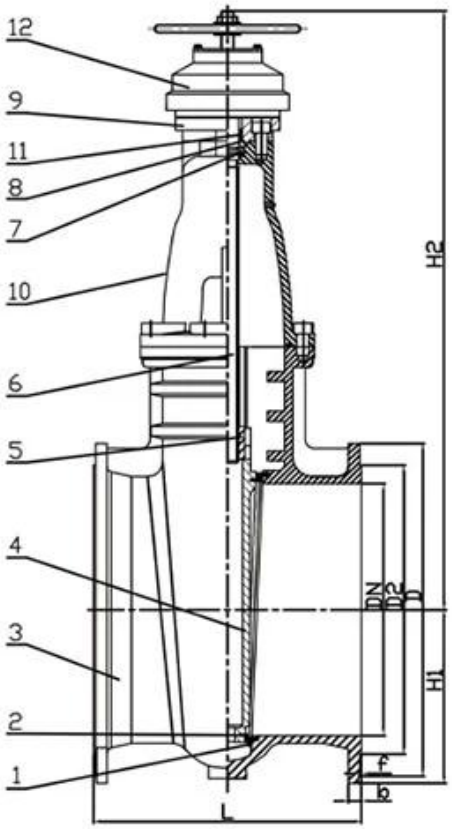

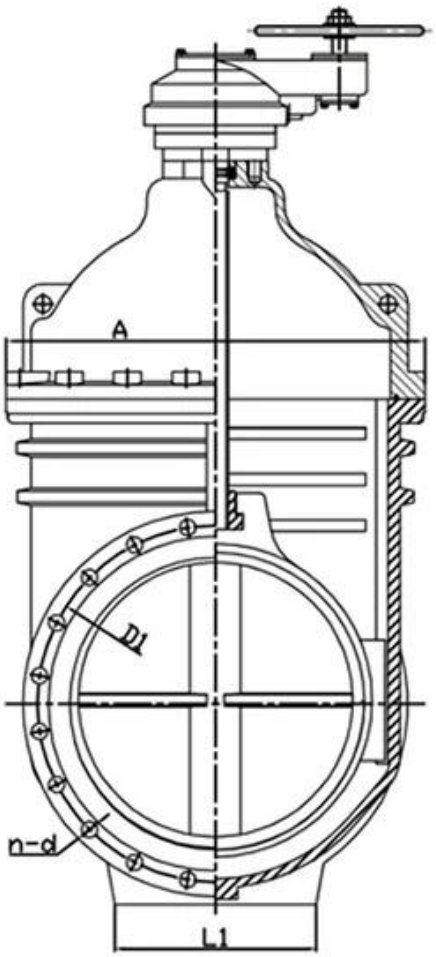

RELATED PRODUCTS

SMALL DIAMETER GATE VALVE
DN50-DN300,PN10/16/25

METAL SEATED GATE VALVE
DN350-DN600,PN10/16/25

LARGE DIAMETER
METAL SEATED GATE VALVE
DN700-DN2000,PN10/16/25

RKS □□□ 1997 □□ □□□□□□□□. □□□ □□□□ □ □□, □□ □□ □□ □ □□ □□ □□□□□ □□ □□□□□□.□□ □□□□ CNC □□ □□, □□ □□ □, □□□□ □□□□ □□ □□, □□ □□ □ □□ □□□ □□□□□.□□□ □□□, □□ □ □□ □□ □□□□□□.Liaoning Province□ □□ □□□ □□□ □□□ □□□□□ □□□ □□□ □□□ □□ □□ □□ □□□ □□□ □□□□ □□ □□ □□ □□ □□□ □□ GB□□ □□□□.□□ □□□□ □ □□ □□□ □□□ □□□□□ □□, □□, □□□□□ RKS □□ □□□ □□□ □□□□ □□.□□□ □□ □□□ □□□□.□□□ □□ □□ □□ : GB, ISO, German □ American Standard, CE □ ADWO-2000, ISO9001, TS, API□ □□ □ □□□□□□.□□□ □□ : □□, □□ □ □□ □□ □ □□, □□ □□ □ □□□ □□.□□, □□ □□ □□□ □□□□□□.□□ □ □□ : □□ □□, □□, □ □□, □□, □□ □□, □□□□ □□ □, □□□ □□□, □□□ □□□□ □□□ □□□ "□□ □ □□, □□□ □□ □ □□□□ □□□ □□□□□ □□□ □□ □□□□ □□□□."□□□ □□ □□ □□□□.□□ □□□ □□□ □□ □□□□□!

COMPANY INFORMATION

01 21 years of professional experience

02 4 factories

03 Independent research and development team
28 top senior professional researchers

04 2 professional testing centers

05 100% high level ex-factory inspection

06 High quality imported materials

07 2 years quality assurance, repair and replacement

COMPANY QUALIFICATION

COMPANY EXHIBITION

□□□□ □□:

Q : □□□ □□□ □□ □□ □□□ □□□□□?
A : □□□ □□, □□, □□, □□, □□ □□□.

Q : □□□□□□ □□ □ □ □□□□?
A : □□, □□, hrdraulic, □□□□□ □□.RKSfluid □□□□□□ □□ □□□ □□□□□.□□□ □□□ □□ □□ □□□□ □ □□□□.

Q : □□ □□□ □□□□□?
A : RKSfluid□□ □□□ □□□ □□ □ □□□ 4 □□ □□□ □□□□.

Q : □□ □□ □□
A : □□ □□□ 2 ~ 5 □□□□ □□□ □□□□.□□□ □□□ □□ □□□ □□.

Q : MOQ
A : □□ □□□ □□ 1pc.

Q : □□ □□□ □□□□□?
A : □□ □ 100% □□ □□□, 2 □ □□.□□□□ □□□□ □□□□□□.
TUV, API, WRA, CE, ISO □□□ □□□□□.
□□□ DIN, ASME, BS EN, JIS, API, AWWA□ □□□□□.

Q : □□□□ □□□ □□□□ □□□ □□ □ □ □□□□?
A : RKSfluid □□□ 20 □ □□□ 70 □ □□□ R & D □□□□□ □□ □□, □□ □□ □ □□ □□□ □□□□□.