https://www.chinavalvesmanufacturer.com/products/PTFE-type-valve-filled-ptfe-valve-ptfe-lined-valve-distributor.html

PTFE Butterfly Valve

BSEN 1092, DIN 2501, ANSI, JIS, AS2129
Size:DN50~DN600
Body:Ductile Iron
Disc:Ductile Iron+PTFE
Seat: PTFE
Connection: Wafer, Lug, Flange

PTFE Butterfly Valve

BSEN 1092, DIN 2501, ANSI, JIS, AS2129
Size: DN50~DN600
Body: Ductile Iron
Disc: Ductile Iron+PTFE
Seat: PTFE
Connection: Wafer, Lug, Flange

PTFE Butterfly Valve

BSEN 1092, DIN 2501, ANSI, JIS, AS2129
Size: DN50~DN600
Body: WCB, CF8, CF8M
Disc: CF8+PTFE, CF8M+PTFE
Seat: PTFE
Connection: Wafer, Lug

PTFE Butterfly Valve

BSEN 1092, DIN 2501, ANSI, JIS, AS2129
Size: DN50~DN600
Body: WCB, CF8, CF8M
Disc: CF8+PTFE, CF8M+PTFE
Seat: PTFE
Connection: Wafer, Lug

PTFE Butterfly Valve

BSEN 1092, DIN 2501, ANSI, JIS, AS2129
Size: DN50~DN600
Body: Ductile Iron
Disc: CF8 , CF8M
Seat: PTFE
Connection: Wafer, Lug, Flange

PTFE Butterfly Valve

BSEN 1092, DIN 2501, ANSI, JIS, AS2129
Size: DN50~DN600
Body: WCB
Disc: CF8 +PTFE, CF8 +PFA
Seat: PTFE
Connection: Wafer, Lug, Flange

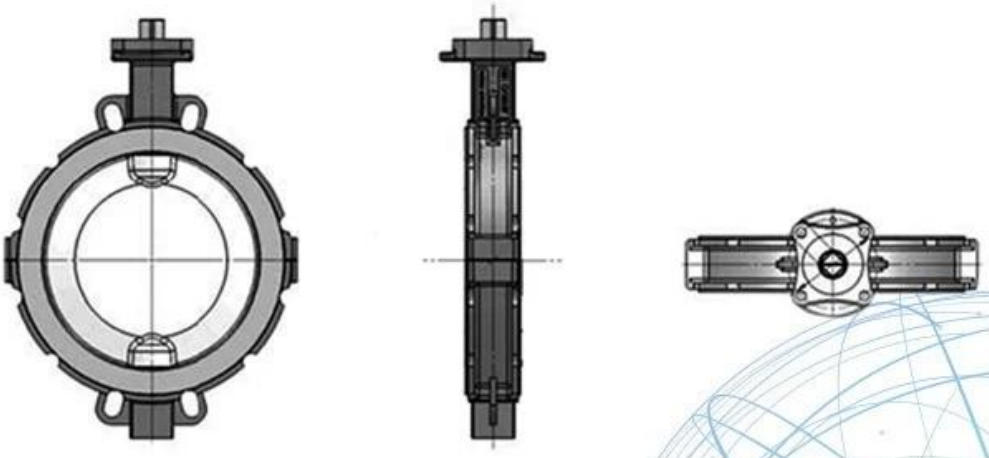

APPLICATION SCENARIO

Industrial water application | Nuclear plant | Petroleum | Steel | Wastewater treatment | Acid-base | Food | Irrigation

Our Factory

Company Advantages

01 21 years of professional experience

02 4 factories

03 Independent research and development team
28 top senior professional researchers

04 2 professional testing centers

05 100% high level ex-factory inspection

06 High quality imported materials

07 2 years quality assurance, repair and replacement

I □□ □□ : □□ □□ □□, □□ □ □□ □□ □□.

II □□ CNC □□□ □□, □□ □□ □, □□□□ □□ □□, □□ □□ □□ □ □□.

III □□□ □□ □□ □□, □□ □□ □□ □□ □□□ □□□□□.

IV □□ □□□ □ □□□□ □□ □□ □□□ □□□□□□□.

V □□ □□ : GB, □□ □□, □□ □□, TUV CE, ISO 9001, ADWO-2000, TS, PED, WRC WRAS, KTW, API 6D, API609.

VI □□ □□ : □□ □□□ □□, □ □□, □□□ □□, □□ □□, □□□ □□, □□□ □□, □□ / □□ / □□ □□□□□, □□ □□.

Exhibition Photos

□□□□ □□

Q : □□□ □□□ □□ □□ □□□ □□□□□?
A : □□□ □□, □□, □□, □□, □□ □□□.

Q : □□□□□ □□□□□□ □□ □ □ □□□□?
A : □□, □□, Hrdraulic, □□□□□ □□. RKSfluid □□□□□□ □□ □□□ □□□□□. □□□ □□ □□□□□.

Q : □□ □□□ □□□□□?
A : RKSfluid□□ □□□ □□□ □□ □ □□□ 4 □□ □□□ □□□□.

Q : □□ □□ □□
A : □□□□ □□□□ 2 ~ 5 □□ □ □□ □□□ □□□□. □□□ □□□ □□ □□□ □□.

Q : MOQ
A : □□ □□□□□ 1pc.

Q : □□ □□□ □□□□□?
A : □□□ □□ 100 % □□ □□□, □□ 2 □. □□□ □□ □□□ □□□□□□.
□□□ TUV, API, WRAS, CE, ISO □□□ □□□□□.
□□□ DIN, ASME, BS EN, JIS, API, AWWA□ □□□□□.

Q : □□□□ □□□ □□□□ □□□ □□ □ □ □□□□?

A : RKSfluid□ 20 □□ □□□ □□□□ □□□ 70 □ □□□ R & D □□□□□ □□ □□, □□ □□ □ □□ □□□ □□□□□.