- Fireproof structural design, API607 / API6FA Standard
- Flexible sealing ring structure, reliable seating
- Safety locking device, error prevention
- Double block & bleed
- Anti-static design

Product Display

TYPHON series Metal Seal Ball Valve

Design Features

- The whole configuration -

TYPHON series valve is a floating uni-directional seated ball valve. It includes the main body, secondary body, the main seat, secondary seat, belleville spring, ball, universal joint, stem, packing gland, packing. The body, seat and ball are forged. The maximum temperature endurance is 800℃. It is used for three-phase flow (gas, solid, liquid), high erosion,high hard granular media, easy to coke materials and high frequency switching conditions.

- Full metal Hard seal -

Between the ball and the seat is metal spherical seal. Between the main seat and the body is the metal flat seal. There is no non-metallic gasket between the seals. The seal pair has tested to "zero leakage".

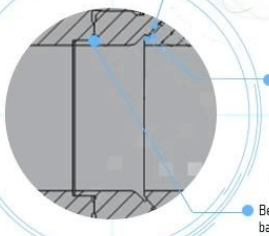

- Double-arc incision design -

The ball inlet and outlet are designed for double-arc incision, and the two incisions are rotated 180 degrees symmetrically.This design can instantaneously expand the flow area when open and close, reducing the media flow rate, thereby reducing the erosion damage of the ball and the valve seat sealing surface, extending the service life of the valve.

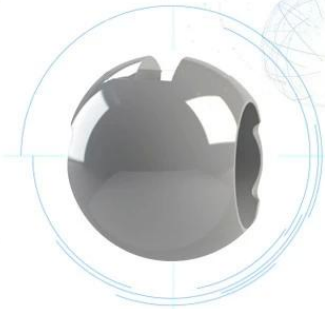

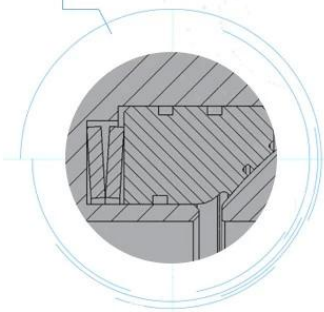

- Spring box design -

The side seat is installed in the seat pocket of the main body.The belleville spring is installed in the spring box formed by the body and the seat. The inner and outer sides of the secondary seat are provided with labyrinth grooves, which prevent the media particles from entering the spring chamber and affecting the spring action.
The secondary seat is driven by a spring to move along the passage axis while providing the preload between the main seat, the secondary seat and the ball.

Engineering Projects

Partners

TALIS, GEMÜ, WATTS, Bray, hawle, amri, BAYARD, AVK, EBRO, KEYSTONE, EMERSON, GIBSON, CAMERON, CMO VALVES, SWISS fluid, SAINT-GOBAIN, KSB, tyco, TTV, SAPAG, haike

PTFE lined butterfly valve

Resilient seat butterfly valve

Double offset butterfly valve

Triple offset butterfly valve

Ball valve

Pipe fittings

Our Factory

Company Advantages

01 21 years of professional experience

02 4 factories

03 Independent research and development team
28 top senior professional researchers

04 2 professional testing centers

05 100% high level ex-factory inspection

06 High quality imported materials

07 2 years quality assurance, repair and replacement

I □□ □□ : □□ □□ □□, □□ □ □□ □□ □□.

II □□ CNC □□□ □□, □□ □□ □, □□ □□, □□ □□ □□ □ □□.

III □□ □□ □□ □□, □□ □□ □□ □□ □□□ □□□□□.

IV □□ □□□ □□□□ □□ □□ □□□ □□□□.

V □□ □□ : GB, □□ □□, □□ □□, TUV CE, ISO 9001, ADWO-2000, TS, PED, WRC WRAS, KTW, API 6D, API609.

VI □□ □□ : □□ □□□ □□, □ □□, □□□ □□, □□ □□ □□, □□□ □□, □□ □□□, □□ / □□ / □□ □□□□□, □□ □□.

Exhibition Photos

□□□□ □□

Q : □□□ □□□ □□ □□ □□□ □□□□□?
A : □□ □□, □□, □□, □□, □□, □□ □□□.

Q : □□□□□□ □□□ □ □□□□?
A : □□, □□, □□ □□□□□ □□. RKSfluid □□□□□□ □□ □□□ □□□□□. □□□ □□□□□ □, □□□□ □□□□□□.

Q : □□□ □□ □□□ □□□□□?
A : RKSfluid□□ □□□ □□□ □□□ □□□ 4 □□ □□□ □□□□.

Q : □□ □□ □□
A : □□□□ □□□ 2 ~ 5 □□ □□□ □ □□□□. □□□ □□□ □□ □□□ □□.

Q : MOQ
: 1 □ □□ □□.

Q : □□□ □□ □□□?
: 100 % □□ □□□ □□ □□ 2 □ □□. □□□□ □□ □□□ □□□□□□.
□□□ TUV, API, WRAS, CE, ISO □□□ □□□□□□.
DIN, ASME, BS EN, JIS, API, AWWA □□□ □□□□□.

Q : □□□ □□□□ □□□ □□□□ □□ □ □ □□□□?
A : RKSfluid□ 20 □□ □□□ □□□□ □□□ 70 □ □□□ R & D □□□□□ □□ □□, □□ □□ □ □□ □□□□ □□□□□.