RKSfluid®
A key Valve in Flow Control
Butterfly Valve
Ball Valve
Gate Valve
Globe Valve
Check Valve
Pipe Fittings

RKS DOUBLE FLANGE ECCENTRIC BUTTERFLY VALVE
DN100 - DN4000, PN10 / 16 / 25

This series of butterfly valves are used for industrial pipelines, as bi-directional open and close and regulation devices,the adjustment range is from 40℃- 90℃ full open.
Suitable temperature ≤ 80℃

Features:

- Hand wheel
- Gear box
- Electric actuation
- Metal seated butterfly valve
- Three-eccentric butterfly valve
- Center line butterfly valve

Options:

- Double Flange Eccentric Resilient Seated Butterfly Valve
- Size range DN100-4000mm
- Standard - ISO / BS / DIN / AWWA / API
- Tests Standard - BS EN 12266-1
- Body - Ductile Iron / Cast Iron / Stainless Steel / WCB
- Disc - Ductile Iron / Cast Iron / Stainless Steel / WCB
- Body Ring - SS420 / SS304 / SS316
- Retaining Ring - SS420 / SS304 / SS316
- Disc Ring - EPDM
- Shaft - SS420 / SS431 / SS316
- Fusion bonded epoxy coating - Min 300 Microns

The designs, material and specifications shown are subject to change without notice due to our continuing programme of product development

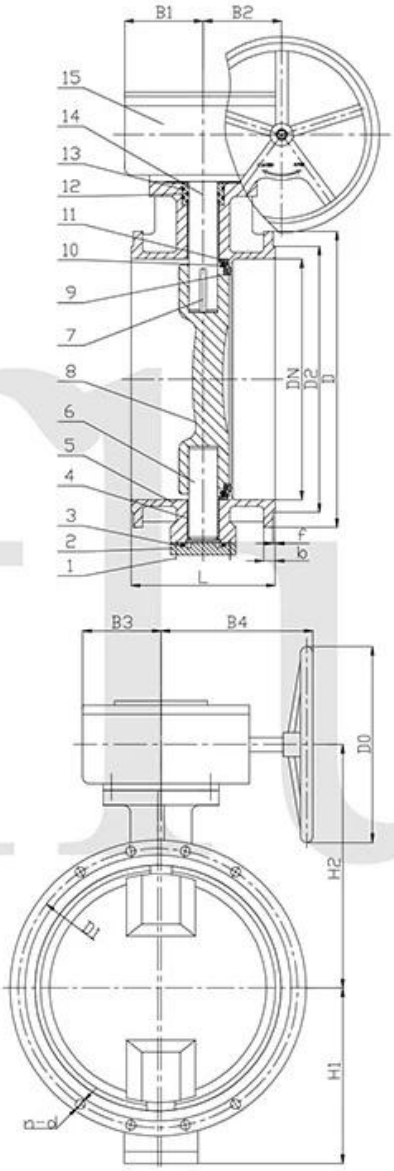

SPECIFICATION		
Nominal pressure (MPa)		1.6
Testing pressure(MPa)	Seal	2.4
	Shell	1.76
Working pressure (MPa)		1.6
Suitable temperature (°c)		<80°c
Suitable medium		Water

TECHNICAL REQUIREMENT

1.Face to face standard: EN 558 Series 14.
2.Flanges standard: BS EN1092-2:1997 PN16.
3.Tests standard: BS EN12266-1:2003 Part 1 Rate A .

MATERIALS OF CONSTRUCTION

No.	Part Name
1	Bolts
2	End plate
3	O-ring
4	Bushes
5	Body
6	Stub shaft
7	Key
8	Disk
9	Retaining ring
10	Disk seal ring
11	Body seal ring
12	Stuffing
13	Stuffing box
14	Main shaft
15	Gearbox

350	1.6	290	Ø520	Ø470	Ø429	26.5	4	16-Ø28	153	110	141	341	Ø360	296	381
300	1.6	270	Ø460	Ø410	Ø370	24.5	4	12-Ø28	120	73	108	308	Ø320	252	330
250	1.6	250	Ø405	Ø355	Ø319	22	3	12-Ø28	120	73	108	308	Ø320	223	300
200	1.6	230	Ø340	Ø295	Ø266	20	3	12-Ø23	120	73	108	308	Ø320	193	265
150	1.6	210	Ø285	Ø240	Ø211	19	3	8-Ø23	80	53	80	257	Ø160	156	218
100	1.6	190	Ø220	Ø180	Ø156	19	3	8-Ø19	80	53	80	257	Ø160	118	173
DN (mm)	PN (MPa)	L	D	D1	D2	b	f	n-d	B1	B2	B3	B4	D0	H1	H2

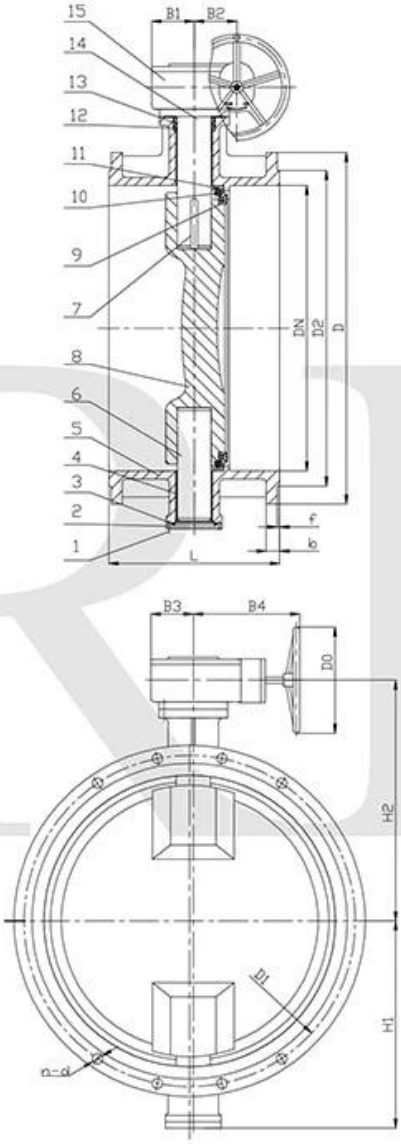

SPECIFICATION		
Nominal pressure (MPa)		1.6
Testing pressure(MPa)	Seal	2.4
	Shell	1.76
Working pressure (MPa)		1.6
Suitable temperature (°c)		<80°c
Suitable medium		Water

TECHNICAL REQUIREMENT

1.Face to face standard: EN 558 Series 14.
2.Flanges standard: BS EN1092-2:1997 PN16.
3.Tests standard: BS EN12266-1:2003 Part 1 Rate A .

MATERIALS OF CONSTRUCTION

No.	Part Name
1	Bolts
2	End plate
3	O-ring
4	Bushes
5	Body
6	Stub shaft
7	Key
8	Disk
9	Retaining ring
10	Disk seal ring
11	Body seal ring
12	Stuffing
13	Stuffing box
14	Main shaft
15	Gearbox

600	1.6	390	Ø840	Ø770	Ø720	36	5	20-Ø37	184	146	163	495	Ø400	465	544
500	1.6	350	Ø715	Ø650	Ø609	31.5	4	20-Ø34	153	110	141	449	Ø360	385	482
450	1.6	330	Ø640	Ø585	Ø548	30	4	20-Ø31	153	110	141	449	Ø360	354	441
400	1.6	310	Ø580	Ø525	Ø480	28	4	16-Ø31	153	110	141	449	Ø360	320	411
DN (mm)	PN (Mpa)	L	D	D1	D2	b	f	n-d	B1	B2	B3	B4	D0	H1	H2

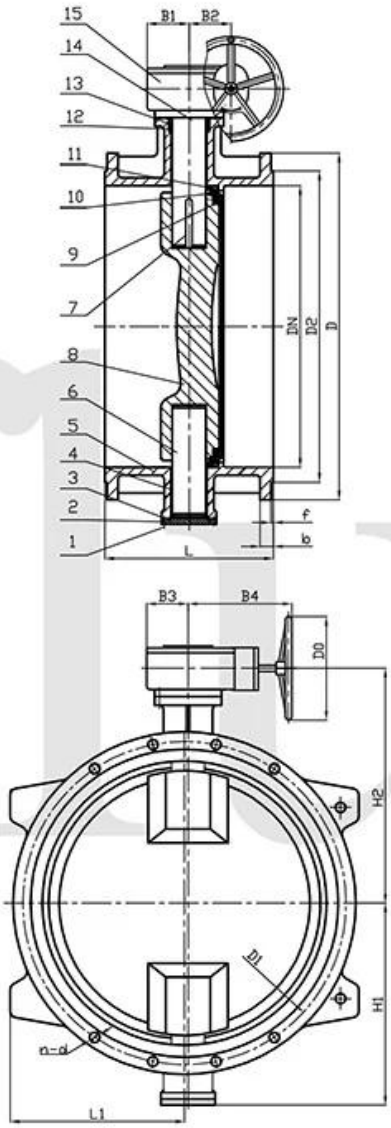

SPECIFICATION		
Nominal pressure (MPa)		1.6
Testing pressure(MPa)	Seal	2.4
	Shell	1.76
Working pressure (MPa)		1.6
Suitable temperature (°c)		<80°c
Suitable medium		Water

TECHNICAL REQUIREMENT

1.Face to face standard: EN 558 Series 14.
2.Flanges standard: BS EN1092-2:1997 PN16.
3.Tests standard: BS EN12266-1:2003 Part 1 Rate A .

MATERIALS OF CONSTRUCTION

No.	Part Name
1	Bolts
2	End plate
3	O-ring
4	Bushes
5	Body
6	Stub shaft
7	Key
8	Disk
9	Retaining ring
10	Disk seal ring
11	Body seal ring
12	Stuffing
13	Stuffing box
14	Main shaft
15	Gearbox

800	1.6	470	Ø1025	Ø950	Ø901	43	5	24-Ø41	184	146	163	495	522	Ø400	570	659
700	1.6	430	Ø910	Ø840	Ø794	39.5	5	24-Ø37	184	146	163	495	465	Ø400	530	610
DN (mm)	PN (Mpa)	L	D	D1	D2	b	f	n-d	B1	B2	B3	B4	L1	D0	H1	H2

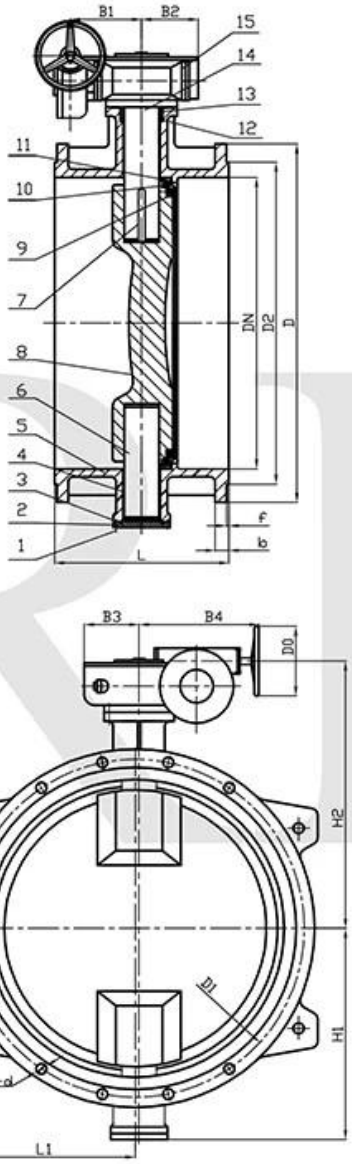

SPECIFICATION		
Nominal pressure (MPa)		1.6
Testing pressure(MPa)	Seal	2.4
	Shell	1.76
Working pressure (MPa)		1.6
Suitable temperature (°c)		<80°c
Suitable medium		Water

TECHNICAL REQUIREMENT

1.Face to face standard: EN 558 Series 14.
2.Flanges standard: BS EN1092-2:1997 PN16.
3.Tests standard: BS EN12266-1:2003 Part 1 Rate A .

MATERIALS OF CONSTRUCTION

No.	Part Name
1	Bolts
2	End plate
3	O-ring
4	Bushes
5	Body
6	Stub shaft
7	Key
8	Disk
9	Retaining ring
10	Disk seal ring
11	Body seal ring
12	Stuffing
13	Stuffing box
14	Main shaft
15	Gearbox

1200	1.6	630	Ø1485	Ø1390	Ø1328	57	5	32-Ø50	237	218	263	545	750	Ø500	845	1058
1100	1.6	550	Ø1355	Ø1270	Ø1218	53.5	5	32-Ø44	237	218	263	545	685	Ø500	760	973
1000	1.6	550	Ø1255	Ø1170	Ø1112	50	5	28-Ø44	237	218	263	545	635	Ø500	710	932
900	1.6	510	Ø1125	Ø1050	Ø1001	46.5	5	28-Ø41	211	183	220	496	570	Ø500	640	811
DN (mm)	PN (Mpa)	L	D	D1	D2	b	f	n-d	B1	B2	B3	B4	L1	D0	H1	H2

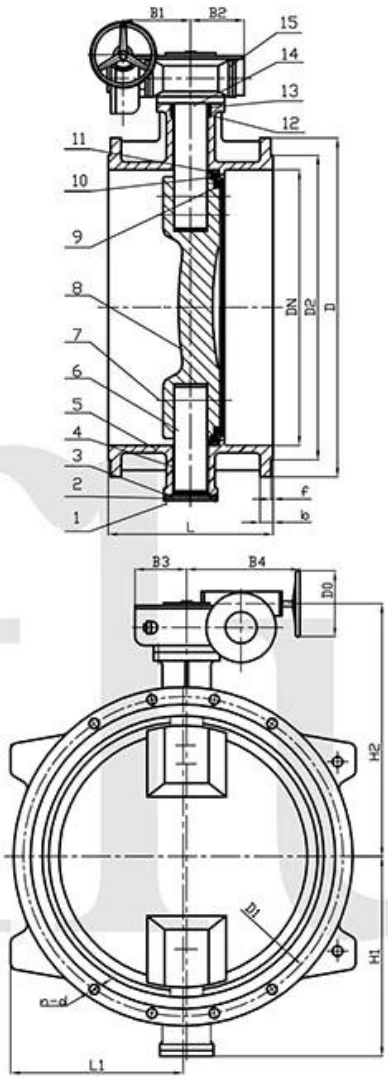

SPECIFICATION		
Nominal pressure (MPa)		1.6
Testing pressure(MPa)	Seal	2.4
	Shell	1.76
Working pressure (MPa)		1.6
Suitable temperature (°c)		<80°c
Suitable medium		Water

TECHNICAL REQUIREMENT

1.Face to face standard: EN 558 Series 14.
2.Flanges standard: BS EN1092-2:1997 PN16.
3.Tests standard: BS EN12266-1:2003 Part 1 Rate A .

MATERIALS OF CONSTRUCTION

No.	Part Name
1	Bolts
2	End plate
3	O-ring
4	Bushes
5	Body
6	Stub shaft
7	Key
8	Disk
9	Retaining ring
10	Disk seal ring
11	Body seal ring
12	Stuffing
13	Stuffing box
14	Main shaft
15	Gearbox

3000	1.6	1350	Ø3390	Ø3270	Ø3190	100	6	68-Ø62	595	550	570	921	1703	Ø640	2040	2550
2800	1.6	1270	Ø3185	Ø3070	Ø2990	95	6	64-Ø62	595	550	570	921	1600	Ø640	1910	2420
2600	1.6	1190	Ø2965	Ø2850	Ø2780	90	6	60-Ø62	595	550	570	921	1490	Ø640	1760	2280
2500	1.6	1150	Ø2865	Ø2750	Ø2670	88	6	56-Ø62	595	550	570	921	1440	Ø640	1700	2190
2400	1.6	1110	Ø2765	Ø2650	Ø2570	85	6	56-Ø62	595	550	570	921	1390	Ø640	1595	2095
2200	1.6	1030	Ø2555	Ø2440	Ø2370	80	6	52-Ø62	352	330	380	779	1290	Ø640	1418	1850
2000	1.6	950	Ø2345	Ø2230	Ø2150	75	5	48-Ø62	352	320	330	779	1180	Ø500	1340	1715
1800	1.6	870	Ø2130	Ø2020	Ø1950	70	5	44-Ø57	352	320	330	779	1075	Ø500	1203	1594
1600	1.6	790	Ø1930	Ø1820	Ø1750	65	5	40-Ø57	285	275	325	546	975	Ø640	1135	1424
1500	1.6	750	Ø1820	Ø1710	Ø1640	62.5	5	36-Ø57	285	275	325	546	918	Ø640	1035	1326
1400	1.6	710	Ø1685	Ø1590	Ø1530	60	5	36-Ø50	285	275	325	546	850	Ø640	976	1251
1300	1.6	710	Ø1585	Ø1490	Ø1430	60	5	32-Ø50	237	218	263	545	802	Ø500	905	1118
DN (mm)	PN (Mpa)	L	D	D1	D2	b	f	n-d	B1	B2	B3	B4	L1	D0	H1	H2

Double Flange Double Eccentric Stainless Steel Disc Butterfly Valve

Double Flange Double Eccentric Butterfly Valve

Double Flange Centerline Large Size Butterfly Valve

Double Flange Double Eccentric Large Size Butterfly Valve

RKSfluid

APPLICATION SCENARIO

Our Factory

RKS □□□ □□□ □□ □ □□, □□ □□ □□, □□ □□ □□ □□□□□ □□ □□□ 1997 □□ □□□□□. □□ □□ CNC □□□ □□, □□ □□ □□ □□□□ □□ □□, □□ □□ □□ □ □□□ □□□□. □□□ □□, □□ □ □□□□□ □□ □□□□. □ □□ □□□ □□ □□□ □□□ □□□ □□□ □□□ □□□ □□□ □□ □□ □□ □□□ □□□ □□, □□□ □□ □□ □□□ □□ GB□ □□□ □ □□□□. □□ □□□ □□ □□□ □□□ □□□□□ □□, □□, □□, □□□ RKS □□ □□□ □□□ □□□ □ □□. □□□ □□ □□□□ □□□□. □□□ □□ □□ □□ □□ : CE □ ADWO- 2000, ISO9001, TS, API□ □□ TUV□ □□ □□ GB, ISO, □□□ □□□ □□. □□□ □□ : □□, □□ □ □□ □ □□, □□ □□□ □□, □□□ □□.

□□ □□, □□ □□ □□. □□ □ □□ : □□□□□□, □□, □□□□, □□ □□, □□□□ □□ □, □□□ □□□, □□□ □□ Saddles.After □, □□□ □□□□ □□ □ □□ "□ □□□□□ □□□ □□ □□ □□, □□□ □□□ □□□□ □□ "□□□ □ □□ □□ □□. □□ □□□ □□□ □□ □□□□□!

Our Certificates

Exhibition Photos