DESIGN FEATURES

DURABLE

- No-pin connection, 1 pc blow-out proof stem
- DI/CI Nodularity over 95%

ANTI-CORROSION

- Material: Epoxy powder: AkzoNobel, Earth Best!
- Coating Thickness: 200-250μm
- Spraying temp: over 200℃. Doesn't fade, even wipe with diethyl ether

QUALITY STANDARD

- 100% quality test, follow DIN, ASTM, JIS, GB/T, ISO, BS EN, API
- ONLY ONE Manufacturer get CE certification up to DN1800
- 2 years warranty. 15000 times On-off test, 30000 times Destructive experiment

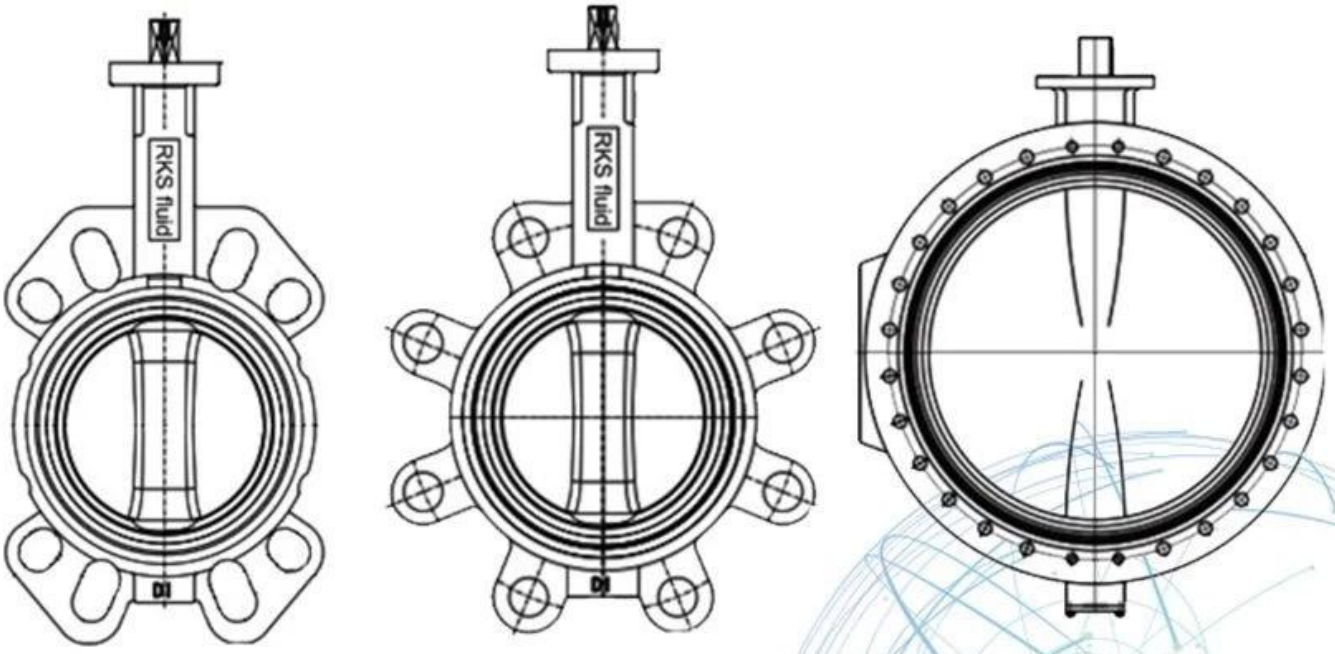

Application Scenario

METRIC DIMENSIONS:Millimeters

DN32-DN300 Wafer/Lug with alignment holes								
Size	L	H1	H2	h	A	D	d	ISO5211
DN32/DN40	33	56	126.5	22	11	50	7	F05
DN50	43	62	140	22	11	50	7	F05
DN65	46	69	156	22	11	50	7	F05
DN80	46	92	160	22	11	50	7	F05
DN100	52	107	182	22	11	50	7	F05
DN125	56	122	195	22	14	70	8.5	F07
DN150	56	134	210	22	14	70	8.5	F07
DN200	60	166	237	22	17	70	8.5	F07
DN250	68	207	262.5	28	22	102	11	F10
DN300	78	234	300	28	22	102/125	11/13	F10/F12

IMPERIAL DIMENSIONS:Inches

NPS1¼-NPS12 Wafer/Lug with alignment holes								
Size	L	H1	H2	h	A	D	d	ISO5211
NPS1¼/NPS1½	1.30	2.20	4.98	0.87	0.43	1.97	0 28	F05
NPS2	1.69	2.44	5.51	0.87	0.43	1.97	0.28	F05
NPS2.5	1.81	2.72	6.14	0.87	0.43	1.97	0.28	F05
NPS3	1.81	3.62	6.30	0.87	0.43	1.97	0.28	F05
NPS4	2.05	4.21	7.17	0.87	0.43	1.97	0.28	F05
NPS5	2.20	4.80	7.68	0.87	0.55	2.76	0.33	F07
NPS6	2.20	5.28	8.27	0.87	0.55	2.76	0.33	F07
NPS8	2.36	6.54	9.33	0.87	0.67	2.76	0.33	F07
NPS10	2.68	8.15	10.33	1.10	0.87	4.02	0.43	F10
NPS12	3.07	9.21	11.81	1.10	0.87	4.02/4.92	0.43/0.51	F10/F12

Our Factory

Company Advantages

01 21 years of professional experience

02 4 factories

03 Independent research and development team
28 top senior professional researchers

04 2 professional testing centers

05 100% high level ex-factory inspection

06 High quality imported materials

07 2 years quality assurance, repair and replacement

I □□ □□ : □□ □□ □□, □□ □ □□ □□ □□.

II □□ CNC □□□ □□, □□ □□ □, □□□□ □□ □□, □□ □□ □□ □ □□.

III □□ □□ □□ □□□ □□□ □□□□ □□ □□□ □□ □□ □□.

IV □□ □□□ □□□□ □□ □□ □□□ □□□□.

V □□ □□ : GB, □□ □□, □□ □□, TUV CE, ISO 9001, ADWO-2000, TS, PED, WRC WRAS, KTW, API 6D, API609.

VI □□ □□□ : □□ □ □□, □ □□, □□□ □□, □□ □□, □□□ □□, □□□ □□, □□ / □□ / □□ □□□□□, □□ □□.

Exhibition Photos

□□□□ □□

Q : □□□ □□□ □□ □□ □□□ □□□□□?
A : □□ □□, □□, □□, □□, □□, □□ □□□.

Q : □□□□□□ □□ □ □ □□□□?
A : □□□, □□□, □□□, □□□□□ □□. RKSfluid □□□□□□ □□ □□□ □□□□□. □□□ □□□□□, □□□□ □□□□□□.

Q : □□ □□□ □□□□□?
A : RKSfluid□□ □□□ □□□ □□ □ □□□ 4 □□ □□□ □□□□.

Q : □□ □□ □□
: □□ □□ □□ 2 ~ 5 □. □□□ □□ □□□ □□.

Q : MOQ
: 1 □ □□ □□.

Q : □□□ □□ □□□?
: 100 % □□ □□□ □□ □□ 2 □ □□. □□□ □□ □□□ □□□□□□.
□□□ TUV, API, WRAS, CE, ISO □□□ □□□□□.
□□□ DIN, ASME, BS EN, JIS, API, AWWA□ □□□□□.

Q : □□□ □□□□ □□□ □□□□ □□ □ □ □□□□?

A : RKSfluid□ 20 □□ □□□ □□□□ □□□ 70 □ □□□ R & D □□□□□ □□ □□, □□ □□ □ □□ □□□ □□□□□.
□□□ □□ □□ □□□ □□ □□□□ □ □□