RKSfluid®
A key Valve in Flow Control
Butterfly Valve
Ball Valve
Gate Valve
Globe Valve
Check Valve
Pipe Fittings

DN32/40~DN300

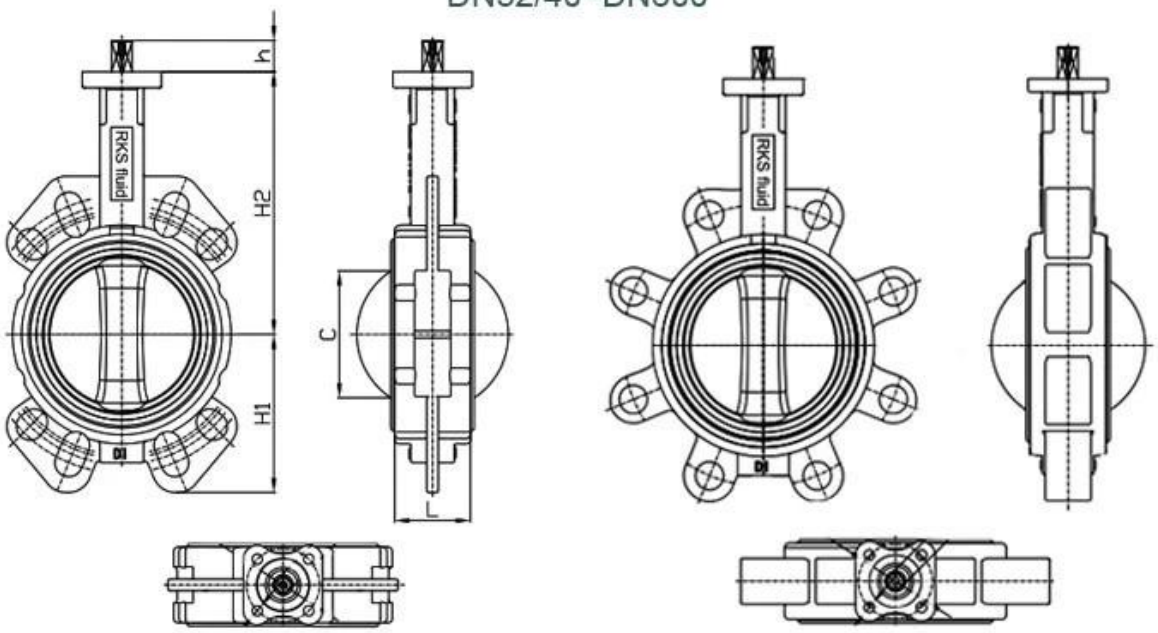

DN350~DN1000

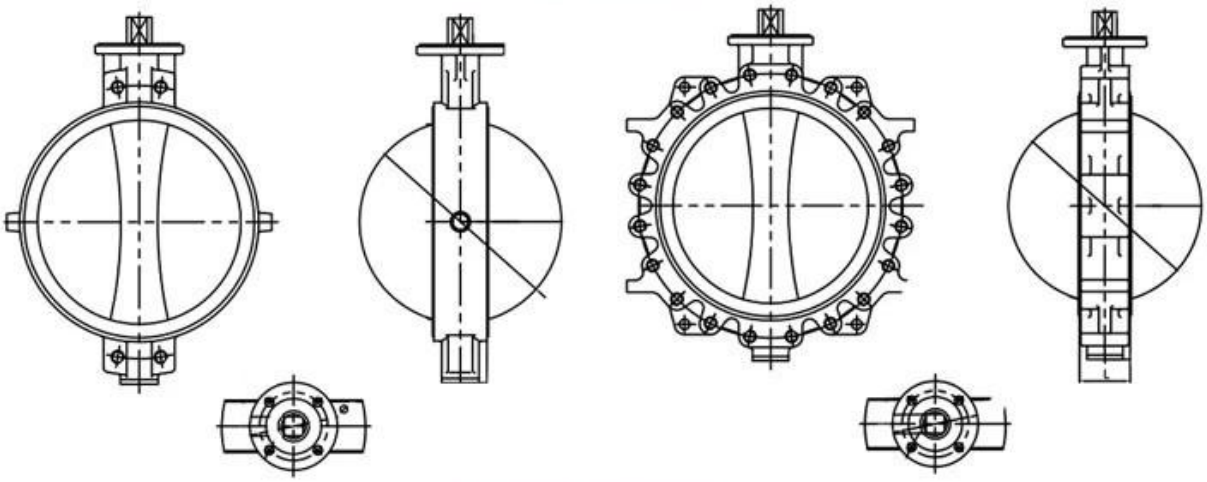

DN500~DN2400

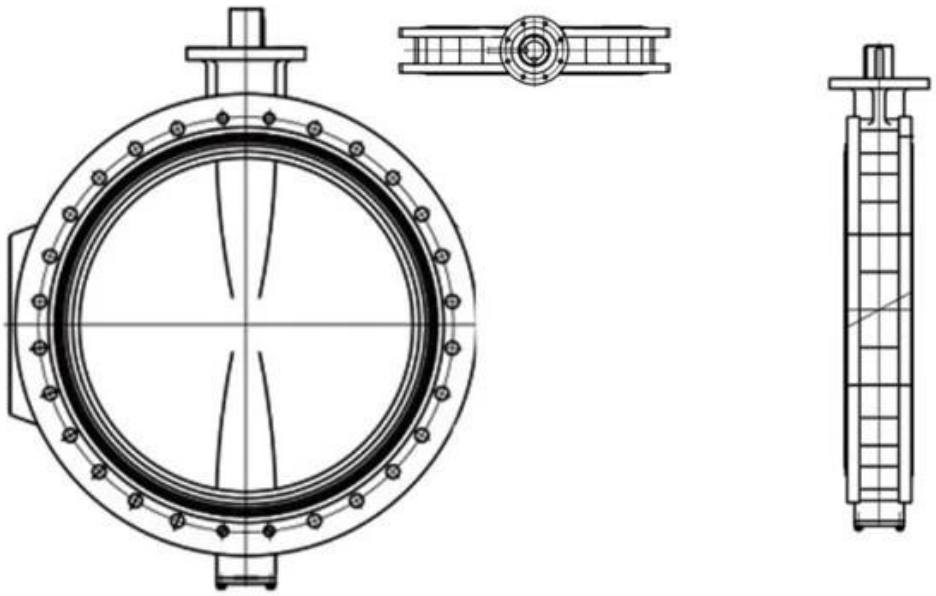

DESIGN FEATURES

DURABLE

- No-pin connection, 1 pc blow-out proof stem
- DI/CI Nodularity over 95%

ANTI-CORROSION

- Material: Epoxy powder: AkzoNobel, Earth Best!
- Coating Thickness: 200-250μm
- Spraying temp: over 200℃. Doesn't fade, even wipe with diethyl ether

QUALITY STANDARD

- 100% quality test, follow DIN, ASTM, JIS, GB/T, ISO, BS EN, API
- ONLY ONE Manufacturer get CE certification up to DN1800
- 2 years warranty. 15000 times On-off test, 30000 times Destructive experiment

APPLICATION SCENARIO

PTFE lined butterfly valve

Resilient seat butterfly valve

Double offset butterfly valve

Triple offset butterfly valve

Ball valve

Pipe fittings

□ □□ □□ : □□ □□ □□, □□ □ □□ □□ □□.

□ □□ CNC □□□ □□, □□ □□ □, □□ □□ □□ □□, □□ □□ □□ □ □□.

▒ □□ □□ □□ □□ □□□ □□□□ □□ □□□ □□ □□ □□.

□ □□□ □□□ □ □□□ (Houston)□ □□ □□ □□□ □□□□□□.

◈ □□ □□ : GB, □□ □□, □□ □□, TUV CE, ISO 9001, ADWO-2000, TS, PED, WRC WRAS, KTW, API 6D, API609.

VI □□ □□ : □□ □□□ □□, □ □□, □□□ □□, □□ □□, □□□ □□, □□□ □□, □□ / □□ / □□ □□□□□, □□ □□.

Our Factory

Company Advantages

01 21 years of professional experience

02 4 factories

03 Independent research and development team
28 top senior professional researchers

04 2 professional testing centers

05 100% high level ex-factory inspection

06 High quality imported materials

07 2 years quality assurance, repair and replacement

Exhibition Photos

Our Certificates

□□□□ □□

Q : □□□□ □□□□ □□ □□□ □□□□□?
A : □□□ □□, □□, □□, □□, □□ □□□.

Q : □□□□□□ □□ □ □ □□□□?
A : □□□, □□, □□, □□□□□ □□. RKSfluid □□□□□□ □□ □□□ □□□□□. □□□ □□□□□, □□ □□□□ □□□□□□.

Q : □□□ □□□ □□□□□?
A : RKSfluid□□ □□□ □□□ □□ □ □□□ 4 □□ □□□ □□□□.

Q : □□ □□ □□
A : □□□□ □□□ 2 ~ 5 □ (□□□ □□)□ □□□ □□□□. □□□ □□□ □□ □□ □□.

Q : MOQ.
A : □□ □□□ □□ 1pc.

Q : □□ □□□ □□□□□?
A : □□ □□ 100 % □□ □□□, 2 □ □□. □□□□ □□□□ □□□□□□.
□□□ TUV, API, WRAS, CE, ISO □□□ □□□□□.
□□ DIN, ASME, BS EN, JIS, API, AWWA□ □□□.

Q : □□□□ □□□ □□ □□□□ □□ □ □ □□□□?
A : RKSfluid □□□ 20 □ □□□ 70 □ R & D □□□□□ □□ □□, □□ □□ □ □□ □□□ □□□□□.