Silent check valves, also known as non-slam check valves and spring-assisted check valves reduce or eliminate water hammer and its effects.

· High strength ductile iron body used for durability and less weight.

· Advanced dynamic design of single body with diffuser provides streamline flow and assures lower head loss.

· One of the lowest head loss check valve, big save in pumping power cost, valve disc with shorter stroker and

spring reverse faster than most of check valve.

· Coated with powder epoxy both inside & outside for corrosion resistance.

· Bronze bushing reduce wearing problem during operation.

· Hydrodynamic design with spring ensures non slamming and water hammerless.

· Stainless steel spring hidden in the diffuser under protection while valve in operation.

· Disc will positively close before reverse flow, and maximize the closing speed up to 0.2 Sec.

· Installation can be vertical/horizontal/ inclined.

· Comply with EN 558-1, ISO 5752 and EN 1092-2, ISO 7005-2 flange dimension.

- Streamlined,minimum noise
- Backflow velocity only 0. 2s, Head loss 0. 1bar with 2m/s
- EPDM/NBR Rubber fully coated disc
- Anti-erosion design. Self-adjusting ball
- Self-cleaning stem, Long time smooth ope ration

Size	DN50 - DN600 (NPS2-NPS24)
Pressure ratings	PN10/16/25
Temperature range	0℃~+80℃
Body	Ductile iron□Stainless steel
Medium	Water, Gas
Design Standard	GB/T 12235-2007
Face to Face	EN 558-1
Flange	EN 1092-2

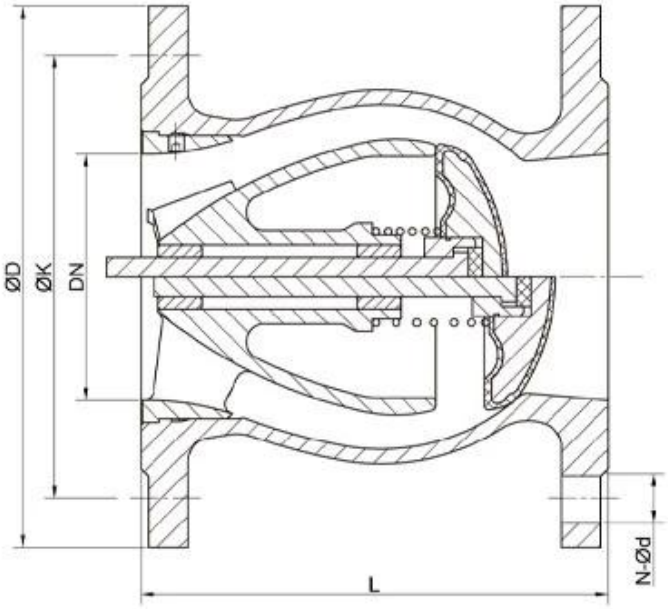

NPS2-NPS14 (DN50-DN350)

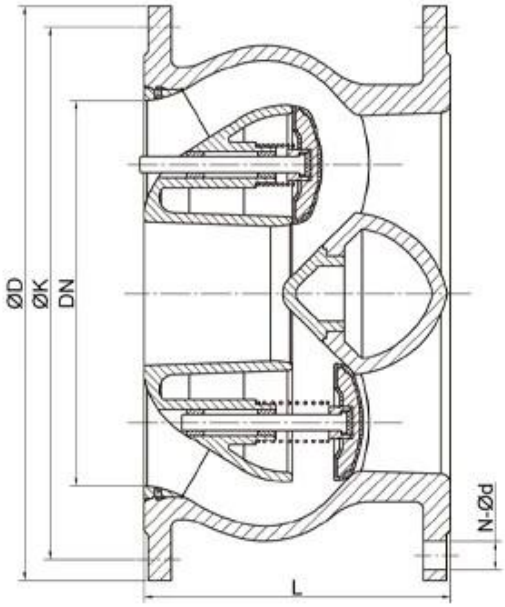

NPS16-NPS24 (DN400-DN600)

COMPANY INFORMATION

I Business area: fluid control products, technology and environmental protection products.

Ⅱ Advanced CNC machining centers, professional process cells, wide-range welding equipment, automatic assembly lines and coating.

Ⅲ China's standard reference unit, to participate in the development of relevant valve industry standards.

Ⅳ We have set up a research and development center in Houston, Texas, in the United States.

V Product Standard: GB, German Standard, American Standard, TUV CE, ISO 9001, ADWO-2000, TS, PED, WRC WRAS, KTW, API 6D, API609.

Ⅵ Main production: butterfly valve, ball valve, gate valve, check valve, globe valves, pipe fittings, manual / pneumatic / electric actuator, valve parts.

COMPANY FACTORY

01
21 years of professional experience
02
4 factories
03
Independent research and development team
28 top senior professional researchers
04
2 professional testing centers
05
100% high level ex-factory inspection
06
High quality imported materials
07
2 years quality assurance, repair and replacement

COMPANY QUALIFICATION

COMPANY EXHIBITION

FAQ

Q: If I need quotation, what informations do we need?
A: Valves' materials, Temperature, Pressure, Medium, Appllication System.

Q: Can you provide actuators, what you have?
A: Pneumatic, Electric, Hrdraulic, Solenoid Valves. RKSfluid actuators adopt USA technology. Which you need, just tell us.

Q: What's your productive capacity?
A: RKSfluid has four plants that can provide the products you need.

Q: Production lead time
A: Normal products have stock in 2~5 working days. Customized base on your need.

Q: MOQ
A: 1pc for all products.

Q: How about the quality assurance?
A: 100% quality test before delivery, 2 years warranty. Ensure your system working safety.
We got TUV, API, WRAS, CE, ISO certification.
Standard conform to DIN, ASME, BS EN, JIS, API, AWWA.

Q: How could you provide quality service to our customers?
A: RKSfluid own 20 years experiences and more than 70 R&D engineers provide technical support, model selection and installation guidance for you.