Air Release valve

Size range:DN25-DN300
Pressure ratings:PN10 PN16
Body:Ductile Iron
Trim:SS304 SS316 etc
Connection:ARVS/KARS-BPT threaded, KARX-Flanged
Working temperature: -10°C~+80°C

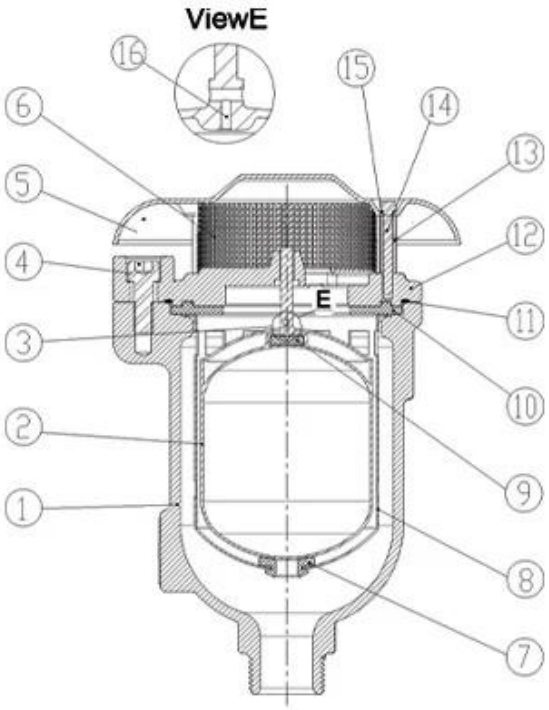

DN25-DN50

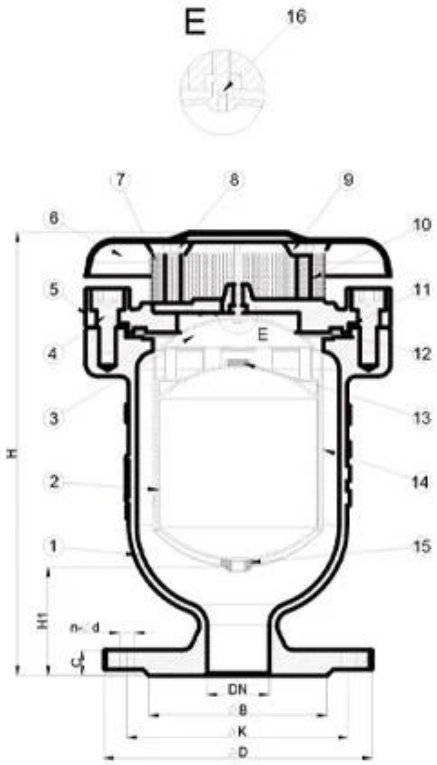

DN50-DN300

Description

1.Advanced design with simple mechanism, strong float to prevent cracking during sudden water hammer& quick closure. 2.Aerokinetic mechanism to resist blow shut under higher air velocity even up to sonic velocity of air. 3.Bottom rubber buffer for collision prevention, and drain easy with proper holes around the cage during vacuum. Outside screen will be an option for safety and prevent insects or birds in. 4.No arms or levers to prevent vibrating, bending, direct closure of the float.Smooth cage outside of the float, keep float moving in specified guide rail. 5.Comply with BS EN 1074-4

COMPANY INFORMATION

RKSfluid was founded in 1997. We are a production workshop for both foundry and machining, research & development center, and quality inspection center. The manufacturing facilities include CNC machining centers, professional processing cells, broad spectrum welding equipment, automatic assembling and coating lines. We have built a team for design, research & development. Our new testing center as a public service platform testing center in Liaoning Province, Become the standard GB of the Chinese valve reference unit, to participate in the development of the relevant valve industry standards. In order to accelerate the expansion of overseas business and resources integration, and to support the success of RKSfluid sales in the USA, German, Russia. We have US Agent.

Our product design standards cover: GB, ISO, German and American Standard, approved by TUV for CE and ADWO- 2000, ISO9001, TS, API.

Our products: Manual, Pneumatically & electrically operated Ball valves, Butterfly valves and Gate Valves. Check Valves, Automatic Control Valves.

Castings and Fittings: Valve bodies, Bonnets, Discs, Stems, Gear Box, Universal Couplings, Flange Adaptors, Tapping Saddles.

After years of development, we continue to improve and seek out innovation while adhering to "Proven Technology, Superior Features and Legendary Value" as our product value philosophy.

Customer satisfaction is our working goal!

I Business area: fluid control products, technology and environmental protection products.

Ⅱ Advanced CNC machining centers, professional process cells, welding equipment, automatic assembly

lines and coating.

Ⅲ China's standard reference unit, to participate in the development of relevant valve industry standards.

Ⅳ We have set up a research and development center in Houston, Texas, in the United States.

V Product Standard: GB, German Standard, American Standard, TUV CE, ISO 9001, ADWO-2000, TS, PED, WRC WRAS, KTW, API 6D, API609.

VI Main production: butterfly valve, ball valve, gate valve, check valve, globe valves, pipe fittings, manual / pneumatic / electric actuator, valve parts.

COMPANY QUALIFICATION

COMPANY EXHIBITION

FAQ:

Q: If I need quotation, what informations do we need?

A: Valves' materials, Temperature, Pressure, Medium, Appllication System.

Q: Can you provide actuators, what you have?

A: Pneumatic, Electric, Hrdraulic, Solenoid Valves. RKSfluid actuators adopt USA technology. Which you need, just tell us.

Q: What's your productive capacity?

A: RKSfluid has four plants that can provide the products you need.

Q: Production lead time

A: Normal products have stock in 2~5 working days. Customized base on your need.

Q: MOQ

A: 1pc for all products.

Q: How about the quality assurance?

A: 100% quality test before delivery, 2 years warranty. Ensure your system working safety.

We got TUV, API, WRAS, CE, ISO certification.

Standard conform to DIN, ASME, BS EN, JIS, API, AWWA.

Q: How could you provide quality service to our customers?

A: RKSfluid own 20 years experiences and more than 70 R&D engineers provide technical support, model selection and installation guidance for you.