RKSfluid®
A key Valve in Flow Control
Butterfly Valve
Ball Valve
Gate Valve
Globe Valve
Check Valve
Pipe Fittings

Resilient seat butterfly valve

PN10/PN16, ANSI 125LB/150LB,5K/10K
Size:DN25-DN2400
Body:DI CI
Disc: Stainless steel
Seat :EPDM, NBR, Viton
Connection: Wafer, Lug, Flange

Resilient seat butterfly valve

PN10/PN16, ANSI 125LB/150LB,5K/10K
Size:DN25-DN2400
Body:DI CI
Disc: DI+ Nylon
Seat :EPDM, NBR, Viton
Connection: Wafer, Lug, Flange

Resilient seat butterfly valve

PN10/PN16, ANSI 125LB/150LB,5K/10K
Size:DN25-DN2400
Body:DI CI
Disc: Stainless steel
Seat :EPDM, NBR, Viton
Connection: Wafer, Lug, Flange

Resilient seat butterfly valve

PN10/PN16, ANSI 125LB/150LB,5K/10K
Size:DN25-DN2400
Body:DI CI
Disc: Stainless steel
Seat :EPDM, NBR, Viton
Connection: Wafer, Lug, Flange

Double flange resilient seat butterfly valve

PN10/PN16, ANSI 125LB/150LB, 5K/10K
Size:DN50-DN1000
Body:DI CI
Disc: Stainless steel
Seat :EPDM, NBR, Viton
Connection: Flange

Short-neck butterfly valve for petroleum

ANSI 125LB/150LB
Top Flange Standard:ISO5211
Size:2"-12"
Body: DI CI
Disc :Stainless Steel
Seat : EPDM, NBR, Viton
Connection:Wafer, Lug

PTFE Butterfly Valve

BSEN 1092, DIN 2501, ANSI, JIS, AS2129
Size:DN50~DN600
Body:Ductile Iron
Disc:Ductile Iron+PTFE
Seat: PTFE
Connection: Wafer, Lug, Flange

PTFE Butterfly Valve

BSEN 1092, DIN 2501, ANSI, JIS, AS2129
Size: DN50~DN600
Body: Ductile Iron
Disc: Ductile Iron+PTFE
Seat: PTFE
Connection: Wafer, Lug, Flange

PTFE Butterfly Valve

BSEN 1092, DIN 2501, ANSI, JIS, AS2129
Size: DN50~DN600
Body: WCB, CF8, CF8M
Disc: CF8+PTFE, CF8M+PTFE
Seat: PTFE
Connection: Wafer, Lug

PTFE Butterfly Valve

BSEN 1092, DIN 2501, ANSI, JIS, AS2129
Size: DN50~DN600
Body: WCB, CF8, CF8M
Disc: CF8+PTFE, CF8M+PTFE
Seat: PTFE
Connection: Wafer, Lug

PTFE Butterfly Valve

BSEN 1092, DIN 2501, ANSI, JIS, AS2129
Size: DN50~DN600
Body: Ductile Iron
Disc: CF8 , CF8M
Seat: PTFE
Connection: Wafer, Lug, Flange

PTFE Butterfly Valve

BSEN 1092, DIN 2501, ANSI, JIS, AS2129
Size: DN50~DN600
Body: WCB
Disc: CF8 +PTFE, CF8 +PFA
Seat: PTFE
Connection: Wafer, Lug, Flange

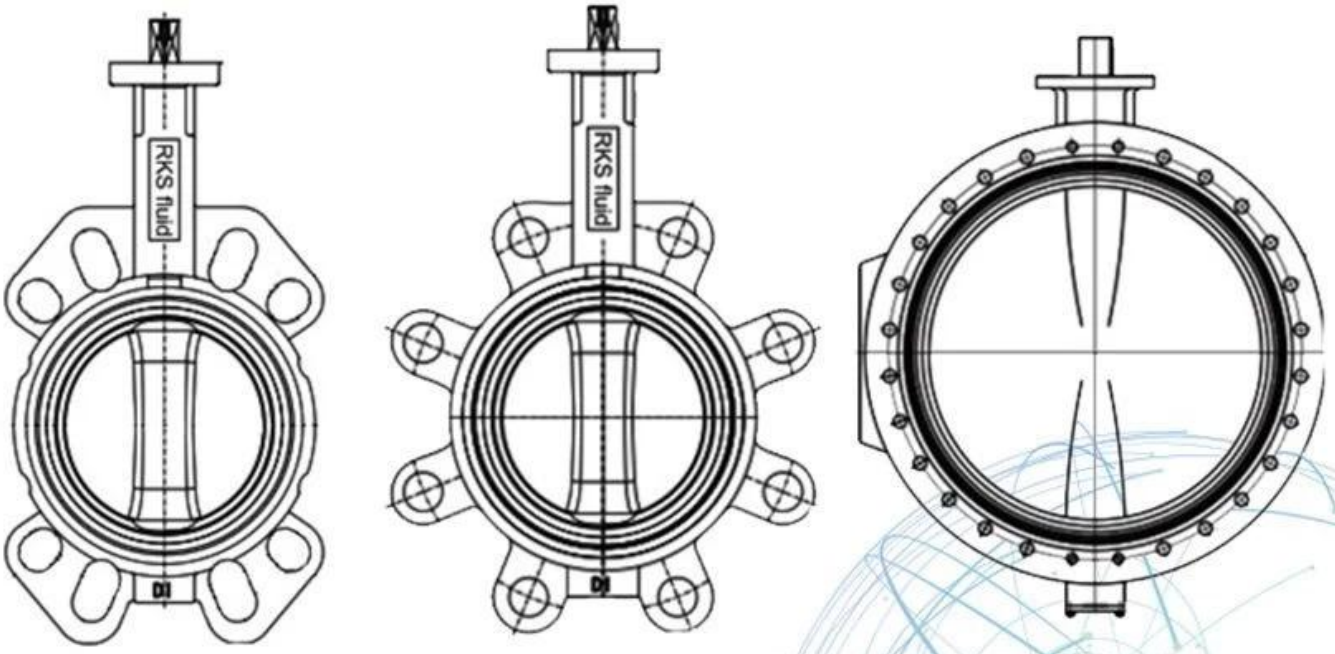

Application Scenario

Our Factory

Company Advantages

01 21 years of professional experience

02 4 factories

03 Independent research and development team
28 top senior professional researchers

04 2 professional testing centers

05 100% high level ex-factory inspection

06 High quality imported materials

07 2 years quality assurance, repair and replacement

RKSfluid was founded in 1997. We are a production workshop both for foundry and for processing, research and & development center and quality control center. Production the facilities include numerical control work centers, professional processing cells, broad spectrum
welding equipment, automatic assembly and coating lines. We have created a design team, research and & development. Our new testing center as a testing center for public service platforms a
Liaoning Province, Become the standard GB of the Chinese valve reference unit, to participate
in developing the relevant valves industry standards. In order to speed up the
overseas business expansion and resource integration, and to support the success of RKS fluid sales in the United States, Germany and Russia. We have an American agent. Our product design standards
Coverage: GB, ISO, German and American standard, approved by TUV for CE and ADWO-2000,
ISO9001, TS, API. Our products: manual, pneumatic and & electrically controlled ball valves Butterfly valves and gate valves. Check valves, automatic control valves. Castings and Fittings: valve bodies, hoods, disks, stems, gearbox, universal joints, flange adapters, Tapping Saddle: after years of development, we continue to improve and seek innovation while adhering to "proven technology, superior features and legendary value" like ours product value philosophy. Customer satisfaction is our business goal! RKSfluid was founded in 1997.
We are a production laboratory both for foundry and
processing, research and & development center and quality control center. Production the facilities include numerical control work centers, professional processing cells, broad spectrum
welding equipment, automatic assembly and coating lines. We have created a design team, research and & development. Our new testing center as a testing center for public service platforms a
Liaoning Province, Become the standard GB of the Chinese valve reference unit, to participate
in developing the relevant valves industry standards. In order to speed up the

overseas business expansion and resource integration, and to support the success of RKS fluid sales in the United States, Germany and Russia. We have an American agent. Our product design standards
Coverage: GB, ISO, German and American standard, approved by TUV for CE and ADWO-2000,
ISO9001, TS, API. Our products: manual, pneumatic and & electrically controlled ball valves Butterfly valves and gate valves. Check valves, automatic control valves. Castings and Fittings: valve bodies, hoods, discs, stems, gearbox, universal joints, flange adapters, Tapping Saddle: after years of development, we continue to improve and seek innovation while adhering to "proven technology, superior features and legendary value" like ours product value philosophy. Customer satisfaction is our business goal!
Business Business area: products for fluid control, technology and products for environmental protection.

Ⅱ Advanced numerical control work centers, professional process cells, welding equipment, automatic assembly lines and coating.

Ⅲ Standard reference unit of China, to participate in the development of relevant standards in the valve industry.

Ⅳ We have set up a research and development center in Houston, Texas, in the United States.

Prodotto Product standards: GB, German standard, American standard, TUV CE, ISO 9001, ADWO-2000, TS, PED, WRC WRAS, KTW, API 6D, API609.

Ⅵ Main production: butterfly valve, ball valve, gate valve, non-return valve, globe valves, pipe fittings, manual / pneumatic / electric actuator, valve parts.

Exhibition Photos

FAQ

Q: If I need a quote, what information do we need?
A: valve materials, temperature, pressure, medium, application system.

Q: Can you supply actuators, what do you have?
A: Pneumatic, electric, hydraulic solenoid valves. RKSfluid actuators adopt US technology. As you need, just tell us.

Q: What is your production capacity?
A: RKSfluid has four plants able to supply the products you need.

Q: production lead time
A: Normal products are available in 2 ~ 5 working days. Base customized for your needs.

Q: MOQ
A: 1 pc for all products.

Q: How about quality assurance?
A: 100% quality test before delivery, 2 years warranty. Ensure the safe operation of the system.
We have obtained the TUV, API, WRAS, CE, ISO certification.
Standard compliant with DIN, ASME, BS EN, JIS, API, AWWA.

Q: How can we provide a quality service to our customers?
A: RKSfluid has 20 years of experience and over 70 research and development engineers provide technical support, model selection and installation guide.