RKSfluid®

RKSfluid®

RKSfluid

CERTIFIED - COMPANY TÜV ITALIA ISO 9001: 2000 WRAS IQ CE

RKSfluid®

RKSfluid®

RKSfluid®

RKSfluid®

Resilient seat butterfly valve

PN10/PN16, ANSI 125LB/150LB,5K/10K
Size:DN25-DN2400
Body:DI CI
Disc: Stainless steel
Seat :EPDM, NBR, Viton
Connection: Wafer, Lug, Flange

Resilient seat butterfly valve

PN10/PN16, ANSI 125LB/150LB,5K/10K
Size:DN25-DN2400
Body:DI CI
Disc: DI+ Nylon
Seat :EPDM, NBR, Viton
Connection: Wafer, Lug, Flange

Resilient seat butterfly valve

PN10/PN16, ANSI 125LB/150LB,5K/10K
Size:DN25-DN2400
Body:DI CI
Disc: Stainless steel
Seat :EPDM, NBR, Viton
Connection: Wafer, Lug, Flange

Resilient seat butterfly valve

PN10/PN16, ANSI 125LB/150LB,5K/10K
Size:DN25-DN2400
Body:DI CI
Disc: Stainless steel
Seat :EPDM, NBR, Viton
Connection: Wafer, Lug, Flange

Double flange resilient seat butterfly valve

PN10/PN16, ANSI 125LB/150LB, 5K/10K
Size:DN50-DN1000
Body:DI CI
Disc: Stainless steel
Seat :EPDM, NBR, Viton
Connection: Flange

Short-neck butterfly valve for petroleum

ANSI 125LB/150LB
Top Flange Standard:ISO5211
Size:2"-12"
Body: DI CI
Disc :Stainless Steel
Seat : EPDM, NBR, Viton
Connection:Wafer, Lug

PTFE Butterfly Valve

BSEN 1092, DIN 2501, ANSI, JIS, AS2129
Size:DN50~DN600
Body:Ductile Iron
Disc:Ductile Iron+PTFE
Seat: PTFE
Connection: Wafer, Lug, Flange

PTFE Butterfly Valve

BSEN 1092, DIN 2501, ANSI, JIS, AS2129
Size: DN50~DN600
Body: Ductile Iron
Disc: Ductile Iron+PTFE
Seat: PTFE
Connection: Wafer, Lug, Flange

PTFE Butterfly Valve

BSEN 1092, DIN 2501, ANSI, JIS, AS2129
Size: DN50~DN600
Body: WCB, CF8, CF8M
Disc: CF8+PTFE, CF8M+PTFE
Seat: PTFE
Connection: Wafer, Lug

PTFE Butterfly Valve

BSEN 1092, DIN 2501, ANSI, JIS, AS2129
Size: DN50~DN600
Body: WCB, CF8, CF8M
Disc: CF8+PTFE, CF8M+PTFE
Seat: PTFE
Connection: Wafer, Lug

PTFE Butterfly Valve

BSEN 1092, DIN 2501, ANSI, JIS, AS2129
Size: DN50~DN600
Body: Ductile Iron
Disc: CF8 , CF8M
Seat: PTFE
Connection: Wafer, Lug, Flange

PTFE Butterfly Valve

BSEN 1092, DIN 2501, ANSI, JIS, AS2129
Size: DN50~DN600
Body: WCB
Disc: CF8 +PTFE, CF8 +PFA
Seat: PTFE
Connection: Wafer, Lug, Flange

DESIGN FEATURES

DURABLE

- No-pin connection, 1 pc blow-out proof stem
- DI/CI Nodularity over 95%

ANTI-CORROSION

- Material: Epoxy powder: AkzoNobel, Earth Best!
- Coating Thickness: 200-250μm
- Spraying temp: over 200℃. Doesn't fade, even wipe with diethyl ether

QUALITY STANDARD

- 100% quality test, follow DIN, ASTM, JIS, GB/T, ISO, BS EN, API
- ONLY ONE Manufacturer get CE certification up to DN1800
- 2 years warranty. 15000 times On-off test, 30000 times Destructive experiment

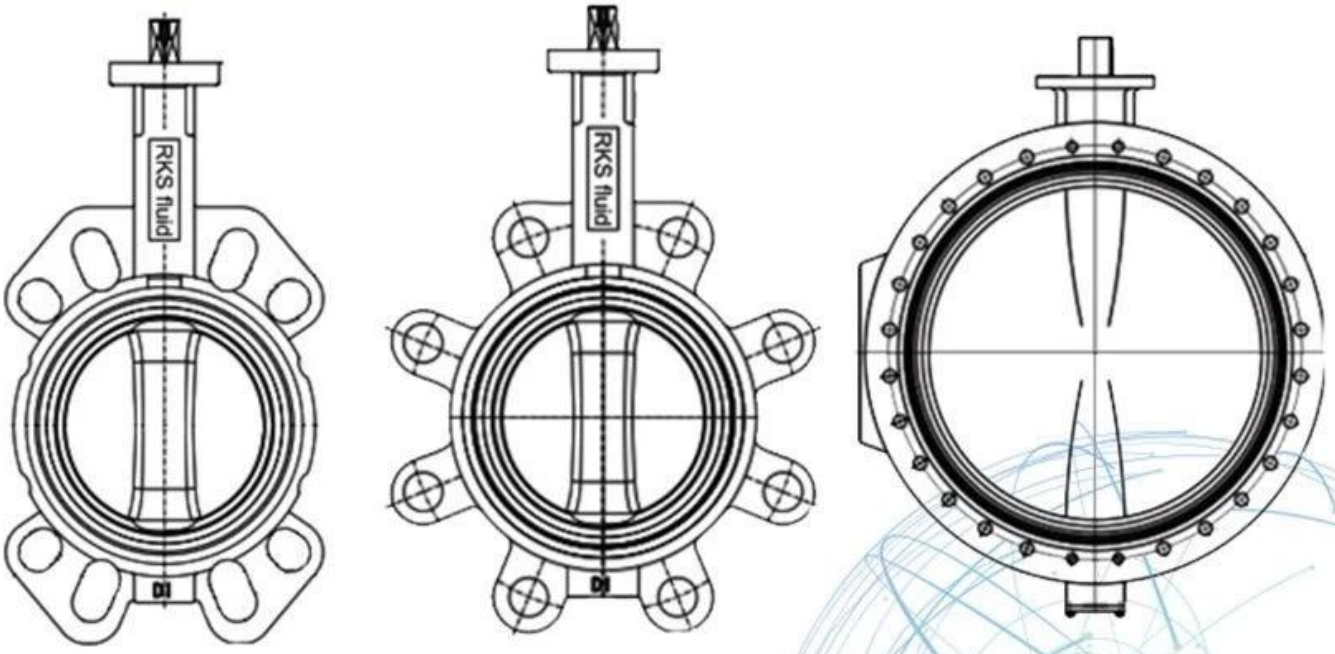

Application Scenario

Our Factory

RKSfluid was founded in 1997. We are a production workshop for both foundry and
machining, research & development center, and quality inspection center. The manufacturing
facilities include CNC machining centers, professional processing cells, broad spectrum
welding equipment, automatic assembling and coating lines. We have built a team for design,
research & development. Our new testing center as a public service platform testing center in
Liaoning Province, Become the standard GB of the Chinese valve reference unit, to participate
in the development of the relevant valve industry standards. In order to accelerate the
expansion of overseas business and resources integration, and to support the success of RKS
fluid sales in the USA, German, Russia. We have US Agent. Our product design standards
cover: GB, ISO, German and American Standard, approved by TUV for CE and

ADWO- 2000,
ISO9001, TS, API. Our products: Manual, Pneumatically & electrically operated Ball valves,
Butterfly valves and Gate Valves. Check Valves, Automatic Control Valves. Castings and
Fittings: Valve bodies, Bonnets, Discs, Stems, Gear Box, Universal Couplings, Flange Adaptors,
Tapping Saddles.After years of development, we continue to improve and seek out innovation
while adhering to "Proven Technology, Superior Features and Legendary Value" as our
product value philosophy. Customer satisfaction is our working goal!
Ⅰ Business area: fluid control products, technology and environmental protection products.

Ⅱ Advanced CNC machining centers, professional process cells, welding equipment, automatic assembly lines and coating.

Ⅲ China's standard reference unit, to participate in the development of relevant valve industry standards.

Ⅳ We have set up a research and development center in Houston, Texas, in the United States.

Ⅴ Product Standard: GB, German Standard, American Standard, TUV CE, ISO 9001, ADWO-2000, TS, PED, WRC WRAS, KTW, API 6D, API609.

Ⅵ Main production: butterfly valve, ball valve, gate valve, check valve, globe valves, pipe fittings, manual / pneumatic / electric actuator, valve parts.