The float ball valve is used to accurately control the water level of the water tank.

When the water level reaches the set upper limit, the float guide valve is closed, the main valve is closed, the pipeline stops the water supply;

When the water level drops, the float valve opens, the main valve opens, and the pipeline begins to supply water.

The float pilot valve can be installed in the tank alone or with the main valve.

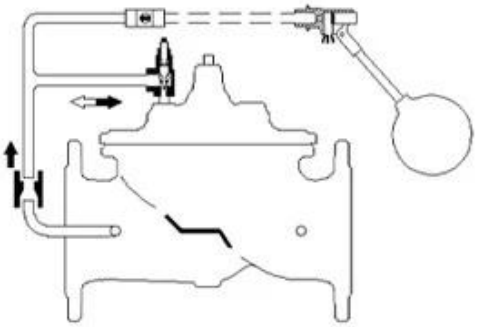

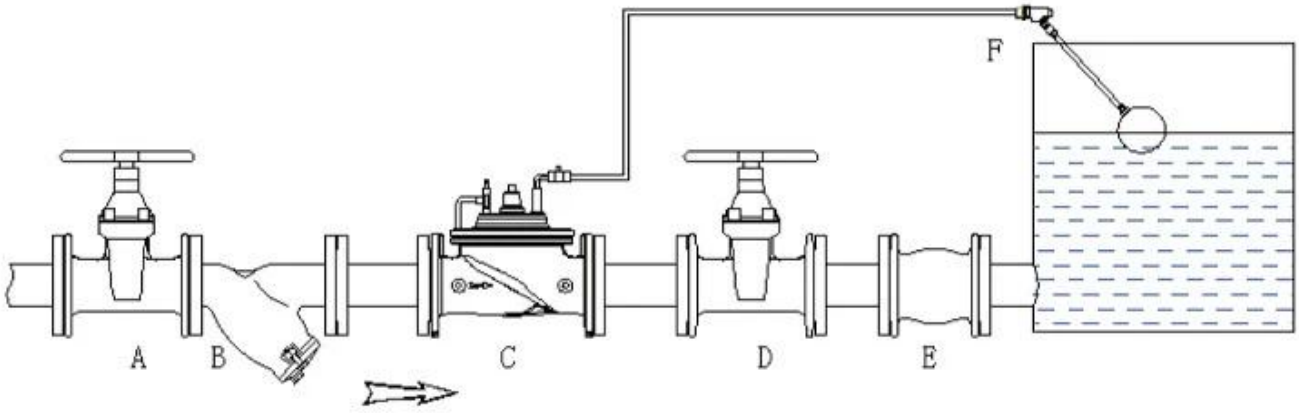

A. Shut off valve B. Y strainer C. Float control valve D. Shut off valve E. Soft joint F. Float pilot

Application Area

- Water Treatment
- HVAC
- Irrigation System
- Pumping
- Smart Water Control
- Power Station

- Desalination

- City/building water supply

Size	DN40-DN1200
Working Medium	Water
Temperature	0℃~70℃
Material	Ductile Iron/Stainless Steel/Cast Steel/Bronze/Aluminum Alloy

DN	L	H	H1	DN	L	H	H1
40	230	139	85	250	730	476	205
50	230	139	85	300	850	526	232
65	290	159	95	350	980	585	262
80	310	179	102	400	1100	624	292
100	350	214	112	500	1250	720	360
125	400	278	127	600	1450	835	424
150	480	333	145	800	1850	1110	515
200	600	407	172	1000	2250	1350	630

COMPANY INFORMATION

I Business area: fluid control products, technology and environmental protection products.

Ⅱ Advanced CNC machining centers, professional process cells, wide-range welding equipment, automatic assembly lines and coating.

Ⅲ China's standard reference unit, to participate in the development of relevant valve industry standards.

Ⅳ We have set up a research and development center in Houston, Texas, in the United States.

V Product Standard: GB, German Standard, American Standard, TUV CE, ISO 9001, ADWO-2000, TS, PED, WRC WRAS, KTW, API 6D, API609.

VI Main production: butterfly valve, ball valve, gate valve, check valve, globe valves, pipe fittings, manual / pneumatic / electric actuator, valve parts

COMPANY FACTORY

01
21 years of professional experience
02
4 factories
03
Independent research and development team
28 top senior professional researchers
04
2 professional testing centers
05
100% high level ex-factory inspection
06
High quality imported materials
07
2 years quality assurance, repair and replacement

COMPANY QUALIFICATION

COMPANY EXHIBITION

FAQ

Q: If I need quotation, what informations do we need?

A: Valves' materials, Temperature, Pressure, Medium, Appllication System.

Q: Can you provide actuators, what you have?

A: Pneumatic, Electric, Hrdraulic, Solenoid Valves. RKSfluid actuators adopt USA technology. Which you need, just tell us.

Q: What's your productive capacity?

A: RKSfluid has four plants that can provide the products you need.

Q: Production lead time

A: Normal products have stock in 2~5 working days. Customized base on your need.

Q: MOQ

A: 1pc for all products.

Q: How about the quality assurance?

A: 100% quality test before delivery, 2 years warranty. Ensure your system working safety.

We got TUV, API, WRAS, CE, ISO certification.

Standard conform to DIN, ASME, BS EN, JIS, API, AWWA.

Q: How could you provide quality service to our customers?

A: RKSfluid own 20 years experiences and more than 70 R&D engineers provide technical support, model selection and installation guidance for you.