DESIGN FEATURES

DURABLE :

· 1 piece non-welded PFA molded DSS Disc stem
· Precision casting WCB/CF8M Bodies

TRIPLE SEAL:

· Triple Seal:Spring loaded Mechanical seal,Radial Lip Seal,FPM
· China ONLY ONE Manufacturer 400Mpa Isostatic pressing PTFE seat,consistent density

ANTI-CORROSION:

· Material: Epoxy powder
· Coating Thickness:200-250μm
· Spraying temp: over 200℃. Doesn't fade, even wipe with diethyl ether

QUALITY STANDARD

· 100% quality test, follow DIN, ASTM, JIS, GB/T, ISO, BS EN, API
· ONLY ONE Manufacturer get CE certification up to DN1800
· 2 years warranty.15000 times On off test,30000 times Destructive experiment

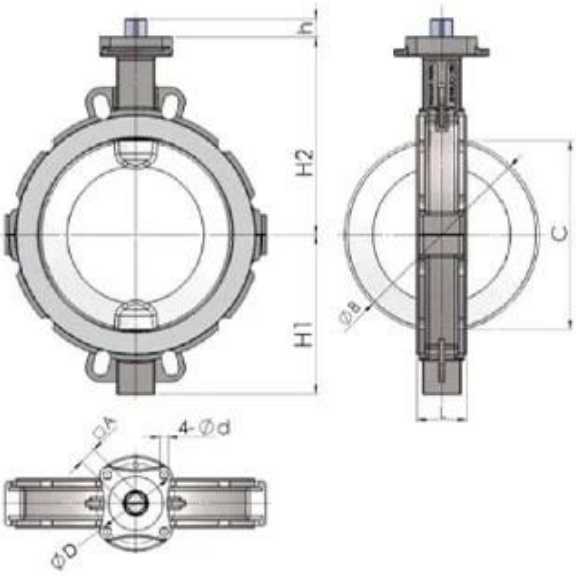

Wafer

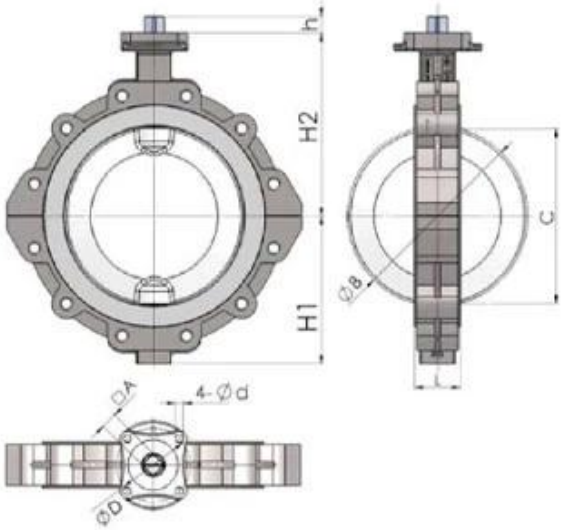

Lug

IMPERIAL DIMENSIONS:Inches										
Size	L	H1	H2	h	A	B	C	D	d	IS05211
NPS2	1.69	2.20	5.31	0.47	0.43	2.01	1.08	1.97	0.28	F05
NPS2 1/2	1.81	3.35	5.91	0.47	0.43	2.72	1.99	1.97	0.28	F05
NPS3	1.81	3.74	6.30	0.63	0.55	3.27	2.70	2.76	0.35	F07
NPS4	2.05	4.13	7.09	0.63	0.55	4.06	3.50	2.76	0.35	F07
NPS5	2.20	4.92	7.68	0.63	0.55	5.00	4.49	2.76	0.35	F07
NPS6	2.20	5.71	10.04	0.63	0.55	5.98	5.57	2.76	0.35	F07
NPS8	2.36	6.69	9.45	0.83	0.75	7.99	7.64	4.02	0.47	F10
NPS10	2.68	8.07	11.81	0.94	0.87	10.00	9.65	4.92	0.51	F12
NPS12	3.07	9.84	12.20	1.14	1.06	12.01	11.61	4.92	0.51	F12

APPLICATION SCENARIO

Industrial water application | Power plant | Sea water desalination | Water treatment | Water supply and drainage | HAVC | Food and drug | Water transport

COMPANY INFORMATION

Ⅰ Business area: fluid control products, technology and environmental protection products.

Ⅱ Advanced CNC machining centers, professional process cells, wide-range welding equipment, automatic assembly lines and coating.

Ⅲ China's standard reference unit, to participate in the development of relevant valve industry standards.

Ⅳ We have set up a research and development center in Houston, Texas, in the United States.

Ⅴ Product Standard: GB, German Standard, American Standard, TUV CE, ISO 9001, ADWO-2000, TS, PED, WRC WRAS, KTW, API 6D, API609.

Ⅵ Main production: butterfly valve, ball valve, gate valve, check valve, globe valves, pipe fittings, manual / pneumatic / electric actuator, valve parts.

01
21 years of professional experience
02
4 factories
03
Independent research and development team
28 top senior professional researchers
04
2 professional testing centers
05
100% high level ex-factory inspection
06
High quality imported materials
07
2 years quality assurance, repair and replacement

COMPANY QUALIFICATION

COMPANY EXHIBITION

FAQ

Q: If I need quotation, what informations do we need?
A: Valves' materials, Temperature, Pressure, Medium, Appllication System.

Q: Can you provide actuators, what you have?
A: Pneumatic, Electric, Hrdraulic, Solenoid Valves. RKSfluid actuators adopt USA technology. Which you need, just tell us.

Q: What's your productive capacity?
A: RKSfluid has four plants that can provide the products you need.

Q: Production lead time
A: Normal products have stock in 2~5 working days. Customized base on your need.

Q: MOQ
A: 1pc for all products.

Q: How about the quality assurance?
A: 100% quality test before delivery, 2 years warranty. Ensure your system working safety.
We got TUV, API, WRAS, CE, ISO certification.
Standard conform to DIN, ASME, BS EN, JIS, API, AWWA.

Q: How could you provide quality service to our customers?
A: RKSfluid own 20 years experiences and more than 70 R&D engineers provide technical support, model selection and installation guidance for you.