- Streamlined, minimum noise
- Backflow velocity only 0.2s, Head loss 0.1bar with 2m/s
- EPDM/NBR Rubber fully coated disc
- Anti-erosion design, Self-adjusting ball
- Self-cleaning stem, Long time smooth operation

Engineering Projects

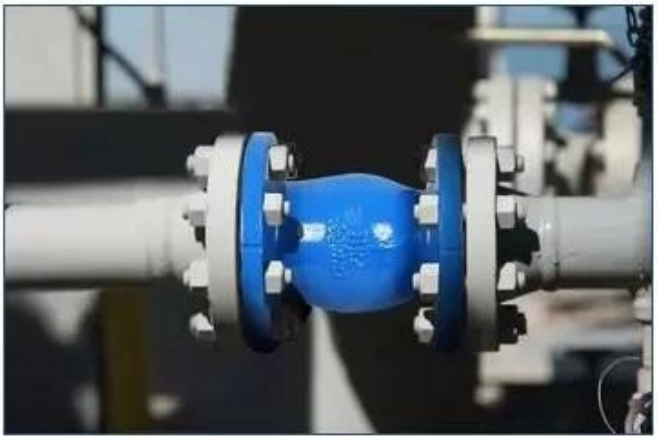

Name	Material
Body	Ductile iron
Ball	NBR
O-Ring	NBR
Cover	Ductile iron
Gasket	SS304
Washer	SS304
Nut	SS304

Ball Check Valve, Threaded

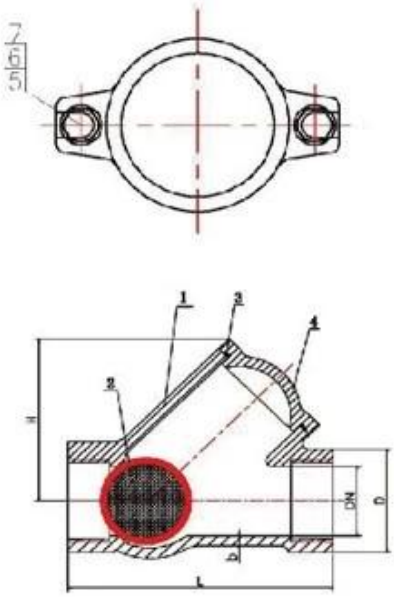

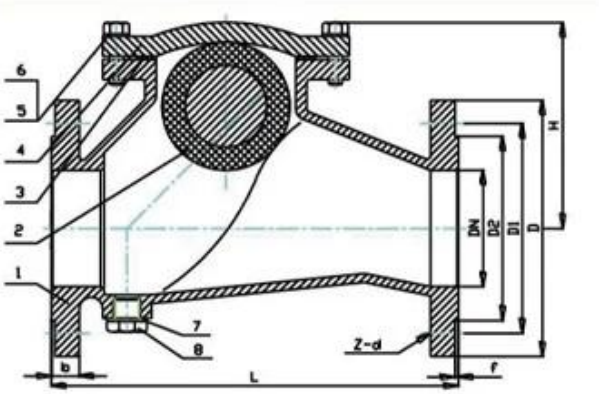

Ball Check Valve, Flange

Name	Material
Body	Ductile iron
Ball	NBR
Gasket	NBR
Body	Ductile iron
Bolt	SS304
Washer	SS304
Washer	Nylon
Plug	SS304

COMPANY INFORMATION

I Business area: fluid control products, technology and environmental protection products.

Ⅱ Advanced CNC machining centers, professional process cells, wide-range welding equipment, automatic assembly lines and coating.

Ⅲ China's standard reference unit, to participate in the development of relevant valve industry standards.

IV We have set up a research and development center in Houston, Texas, in the United States.

V Product Standard: GB, German Standard, American Standard, TUV CE, ISO 9001, ADWO-2000, TS, PED, WRC WRAS, KTW, API 6D, API609.

VI Main production: butterfly valve, ball valve, gate valve, check valve, globe valves, pipe fittings, manual / pneumatic / electric actuator, valve parts.

01
21 years of professional experience
02
4 factories
03
Independent research and development team
28 top senior professional researchers
04
2 professional testing centers
05
100% high level ex-factory inspection
06
High quality imported materials
07
2 years quality assurance, repair and replacement

COMPANY QUALIFICATION

COMPANY EXHIBITION

Partners

FAQ

Q: If I need quotation, what informations do we need?
A: Valves' materials, Temperature, Pressure, Medium, Appllication System.

Q: Can you provide actuators, what you have?
A: Pneumatic, Electric, Hrdraulic, Solenoid Valves. RKSfluid actuators adopt USA technology. Which you need, just tell us.

Q: What's your productive capacity?
A: RKSfluid has four plants that can provide the products you need.

Q: Production lead time
A: Normal products have stock in 2~5 working days. Customized base on your need.

Q: MOQ
A: 1pc for all products.

Q: How about the quality assurance?
A: 100% quality test before delivery, 2 years warranty. Ensure your system working safety.
We got TUV, API, WRAS, CE, ISO certification.
Standard conform to DIN, ASME, BS EN, JIS, API, AWWA.

Q: How could you provide quality service to our customers?

A: RKSfluid own 20 years experiences and more than 70 R&D engineers provide technical support, model selection and installation guidance for you.