DESIGN FEATURES

Features

- Use AkzoNobel material.
- Super Anti-corrosion
- Epoxy powder coating 200-250um,
- Baking varnish over 200℃,

NO.		
1	Body	GGG50
2	Dise	GGG40+EPDM
3	Wedge nut	C48600
4	Stem	SS431
5	Bonnet	GT450-10
6	Gasket	EPDM
7	Y-ring	EPDM85-90
8	Fix ring	CuZn21Si3/C69300
9	Thrust bearing	C69300
10	Seal ring	EPDM70
11	O ring	NBR
12	Retainer ring	POM
13	Bushing ring	POM
14	Gland	SS431
15	Dustproof ring	EPDM85
16	Dise core	GGG40
17	Bolt	SS316

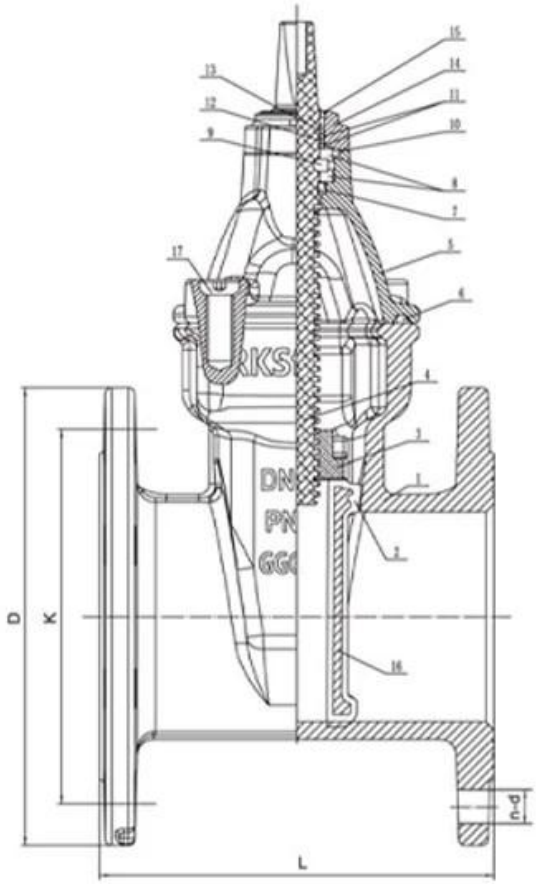

Free wedge nut, **reduces the stem bending forces** and at the same time enables it to be easily replaced.

The more compact new cap, reduces the water retention areas in order **to reduce the risk of bacterial growth**.

One piece stainless steel stem in for **better resistance to axial load and to with stand higher operating torques**.

Three locking tab for bayonet system prevents self-dismantling.

Dust guard integrating three O-ring shape, **prohibiting the introduction of foreign** bodies at the stem.

Male guiding system with composite sliding skate reduces the wear of the wedge against the body, allowing a smooth functionality and a longer life time of the valve.

Triple seal at the operating stem to ensure tightness with the test of time (2500 cycles).

New male composite sliding skate technology ensuring a low operating torque even under high differential pressure and preventing damage or corrosion generated by the friction.

RELATED PRODUCTS

APPLICATION SCENARIO

Industrial water application | Power plant | Sea water desalination | Water treatment | Water supply and drainage | HAVC | Food and drug | Water transport

COMPANY FACTORY

COMPANY INFORMATION

I Commercial Area: Products for fluid control, technological products and environmental protection.

Ⅱ Advanced CNC processing centers, professional process cells, large -range welding equipment, automatic assembly and coating lines.

Ⅲ China Standard Reference Unit, to participate in the development of the standards of the relevant valve sector.

Ⅳ We have established a research and development center in Houston, Texas, United States.

V Standard of the product: GB, German standard, American standards, Ten CE, ISO 9001, ADWO-200, TS, PED, WRC WRAS, KTW, API 6D, API609.

VI Main production: Butterfly valve, ball valve, gate valve, repetition valve, global valves, pipe accessories, manual / tire / electric actuator, valve parts.

01 21 years of professional experience

02 4 factories

03 Independent research and development team
28 top senior professional researchers

04 2 professional testing centers

05 100% high level ex-factory inspection

06 High quality imported materials

07 2 years quality assurance, repair and replacement

COMPANY QUALIFICATION

COMPANY EXHIBITION

Frequently asked questions

Q: If I need a price, what information do we need?
A: Valve materials, temperature, pressure, vehicle, application system.

Q: Can you provide actuators, what do you have?
A: Pneumatic, electrical, HRDRaulic, solenoid valves. RKSfluid actors adopt American technology. You need, just tell us.

Q: What is your production capacity?
A: RKSfluid has four plants that can provide the products you need.

D: Production delivery time
A: Normal products have actions in 2 ~ 5 business days. Personalized base in need.

D: Moq
A: 1 PC for all products.

Q: And the quality guarantee?
A: 100% quality tests before delivery, 2 -year guarantee. Make sure your security system.
We obtained TUV, API, WRAS, CE, ISO Certification.
Standard meets Din, Asme, Bs in, JIS, API, Awwa.

Q: How could you provide quality service to our customers?

A: RKSfluid has 20 years of experiences and more than 70 R&D engineers provide technical support, selection of models and installation indications for you.