- Streamlined, minimum noise
- Backflow velocity only 0.2s, Head loss 0.1bar with 2m/s
- EPDM/NBR Rubber fully coated disc
- Anti-erosion design, Self-adjusting ball
- Self-cleaning stem, Long time smooth operation

Engineering Projects

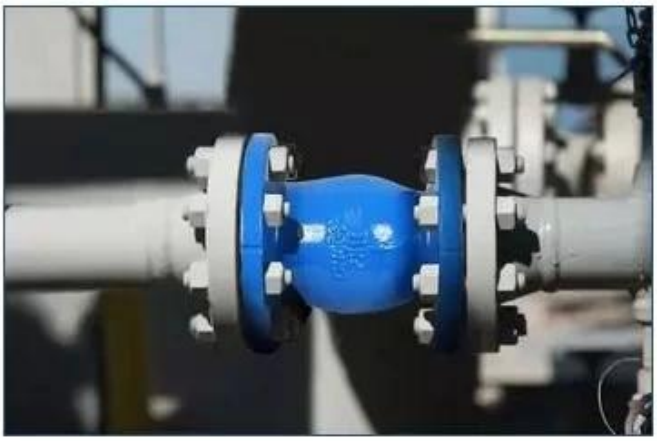

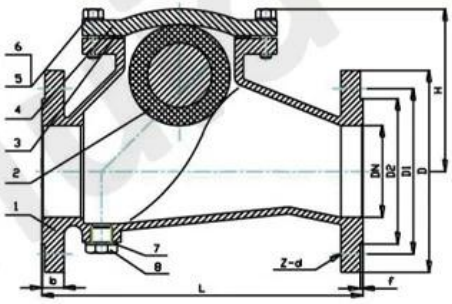

Ball Check Valve, Flange

ITEM	PART NAME	MATERIAL
1	Body	Ductile iron
2	Ball	NBR
3	Gasket	NBR
4	Body	Ductile iron
5	Bolt	SS304
6	Washer	SS304
7	Washer	Nylon
8	Plug	SS304

SIZE	DIN 3202 F6	Flange dimension(EN 1092-2) PN10/PN16		
DN	L	D	K	n-d
DN40/1.5"	180	150	110	4-ø19
DN50/2"	200	165	125	4-ø19
DN65/2.5"	240	185	145	4-ø19
DN80/3"	260	200	160	8-ø19
DN100/4"	300	220	180	8-ø19
DN125/5"	350	250	210	8-ø19
DN150/6"	400	285	240	8-ø23
DN200/8"	500	340	295/295	8-ø23/12-ø23
DN250/10"	600	405	350/355	12-ø23/12-ø28
DN300/12"	700	460	400/410	12-ø23/12-ø28
DN4O0/16"	900	580	515/525	16-ø28/16-ø31
DNS00/20"	1100	715	620/650	20-ø28/20-ø34

RKSfluid®

Product Display

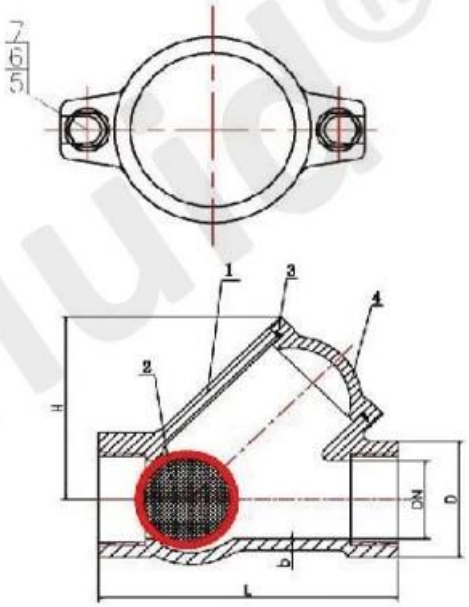

Ball Check Valve, Threaded

ITEM	PART NAME	MATERIAL
1	Body	Ductile iron
2	Ball	NBR
3	O-Ring	NBR
4	Cover	Ductile iron
5	Gasket	SS304

SIZE	DIN 3202 F6	Flange dimension(EN 1092-2) PN10/PN16		
DN	L	D	H	B
DN25	135	50	75	6
DN32	135	50	75	6
DN40	145	60	93	6
DN50	175	72	106	7
DN65	200	90	131	7

RKsfluid®

Company Advantages

01 21 years of professional experience

02 4 factories

03 Independent research and development team
28 top senior professional researchers

04 2 professional testing centers

05 100% high level ex-factory inspection

06 High quality imported materials

07 2 years quality assurance, repair and replacement

COMPANY INFORMATION

I Business area: fluid control products, technology and environmental protection products.

Ⅱ Advanced CNC machining centers, professional process cells, wide-range welding equipment, automatic assembly lines and coating.

Ⅲ China's standard reference unit, to participate in the development of relevant valve industry standards.

Ⅳ We have set up a research and development center in Houston, Texas, in the United States.

Ⅴ Product Standard: GB, German Standard, American Standard, TUV CE, ISO 9001, ADWO-2000, TS, PED, WRC WRAS, KTW, API 6D, API609.

Ⅵ Main production: butterfly valve, ball valve, gate valve, check valve, globe valves, pipe fittings, manual / pneumatic / electric actuator, valve parts.

Exhibition Photos

FAQ

Q: If I need quotation, what informations do we need?
A: Valves' materials, Temperature, Pressure, Medium, Appllication System.

Q: Can you provide actuators, what you have?
A: Pneumatic, Electric, Hrdraulic, Solenoid Valves. RKSfluid actuators adopt USA technology. Which you need, just tell us.

Q: What's your productive capacity?
A: RKSfluid has four plants that can provide the products you need.

Q: Production lead time
A: Normal products have stock in 2~5 working days. Customized base on your need.

Q: MOQ
A: 1pc for all products.

Q: How about the quality assurance?
A: 100% quality test before delivery, 2 years warranty. Ensure your system working safety.
We got TUV, API, WRAS, CE, ISO certification.
Standard conform to DIN, ASME, BS EN, JIS, API, AWWA.

Q: How could you provide quality service to our customers?
A: RKSfluid own 27 years experiences and more than 70 R&D engineers provide technical support, model selection and installation guidance for you.