DESIGN FEATURES

TECHNICAL REQUIREMENT

1.Design standard:BS 5163.
2.Face to face:BS 5163.
3.Flanges standard:BS EN1092-2:1997 PN16.
4.Test standard:BS EN12266-1 Rate B.

FEATURES

- Double flange metal seated gate valve
- Size Range:DN50-DN2000
- Standard-ISO/BS/DIN/AWWA/API
- Tests Standard-BS EN 12266-1
- Body Ring-Bronze/SS420/SS304/SS316
- Body-Ductile Iron /Cast Iron/Stainless Steel /WCB
- Fusion bonded epoxy coating-min 300 microns

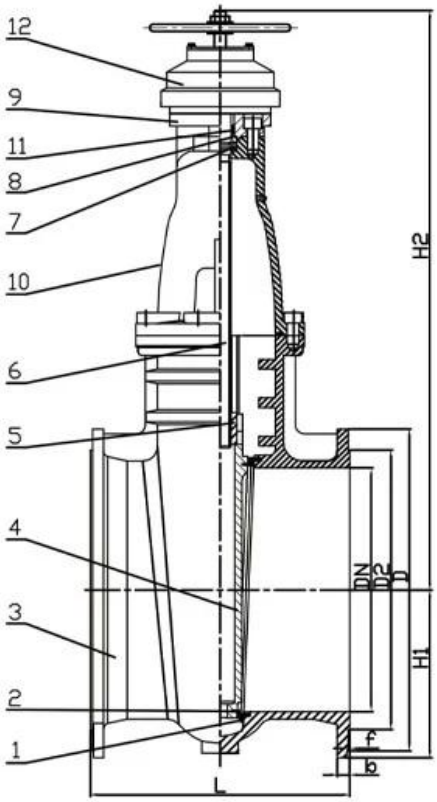

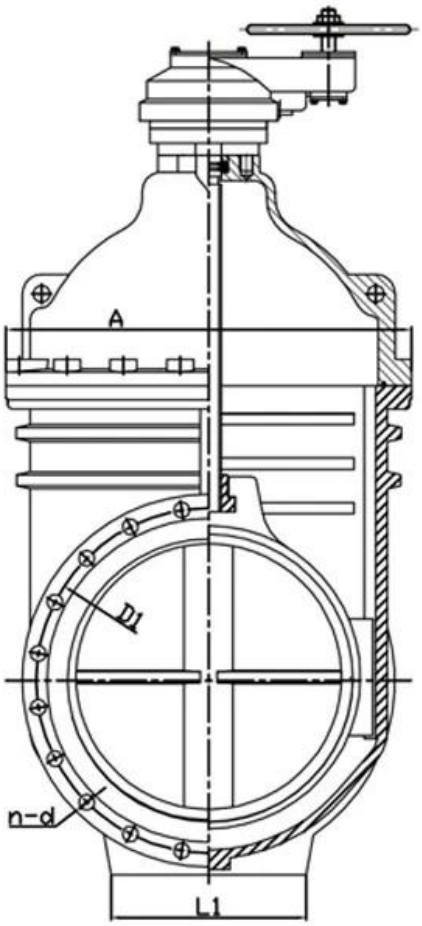

RELATED PRODUCTS

SMALL DIAMETER GATE VALVE
DN50-DN300,PN10/16/25

METAL SEATED GATE VALVE
DN350-DN600,PN10/16/25

LARGE DIAMETER
METAL SEATED GATE VALVE
DN700-DN2000,PN10/16/25

APPLICATION SCENARIO

Industrial water application | Power plant | Sea water desalination | Water treatment | Water supply and drainage | HAVC | Food and drug | Water transport

COMPANY FACTORY

COMPANY INFORMATION

I Business area: fluid control products, technology and environmental protection products.

Ⅱ Advanced CNC machining centers, professional process cells, wide-range welding equipment, automatic assembly lines and coating.

Ⅲ China's standard reference unit, to participate in the development of relevant valve industry standards.

Ⅳ We have set up a research and development center in Houston, Texas, in the United States.

V Product Standard: GB, German Standard, American Standard, TUV CE, ISO 9001, ADWO-2000, TS, PED, WRC WRAS, KTW, API 6D, API609.

Ⅵ Main production: butterfly valve, ball valve, gate valve, check valve, globe valves, pipe fittings, manual / pneumatic / electric actuator, valve parts

01
21 years of professional experience
02
4 factories
03
Independent research and development team
28 top senior professional researchers
04
2 professional testing centers
05
100% high level ex-factory inspection
06
High quality imported materials
07
2 years quality assurance, repair and replacement

COMPANY QUALIFICATION

COMPANY EXHIBITION

FAQ:

Q: If I need quotation, what informations do we need?
A: Valves' materials, Temperature, Pressure, Medium, Appllication System.

Q: Can you provide actuators, what you have?
A: Pneumatic, Electric, Hrdraulic, Solenoid Valves. RKSfluid actuators adopt USA technology. Which you need, just tell us.

Q: What's your productive capacity?
A: RKSfluid has four plants that can provide the products you need.

Q: Production lead time
A: Normal products have stock in 2~5 working days. Customized base on your need.

Q: MOQ
A: 1pc for all products.

Q: How about the quality assurance?
A: 100% quality test before delivery, 2 years warranty. Ensure your system working safety.
We got TUV, API, WRAS, CE, ISO certification.
Standard conform to DIN, ASME, BS EN, JIS, API, AWWA.

Q: How could you provide quality service to our customers?
A: RKSfluid own 20 years experiences and more than 70 R&D engineers provide technical

support, model selection and installation guidance for you.