DESIGN FEATURES

DURABLE

- No-pin connection, 1 pc blow-out proof stem
- DI/CI Nodularity over 95%

ANTI-CORROSION

- Material: Epoxy powder: AkzoNobel, Earth Best!
- Coating Thickness: 200-250μm
- Spraying temp: over 200℃. Doesn't fade, even wipe with diethyl ether

QUALITY STANDARD

- 100% quality test, follow DIN, ASTM, JIS, GB/T, ISO, BS EN, API
- ONLY ONE Manufacturer get CE certification up to DN1800
- 2 years warranty. 15000 times On-off test, 30000 times Destructive experiment

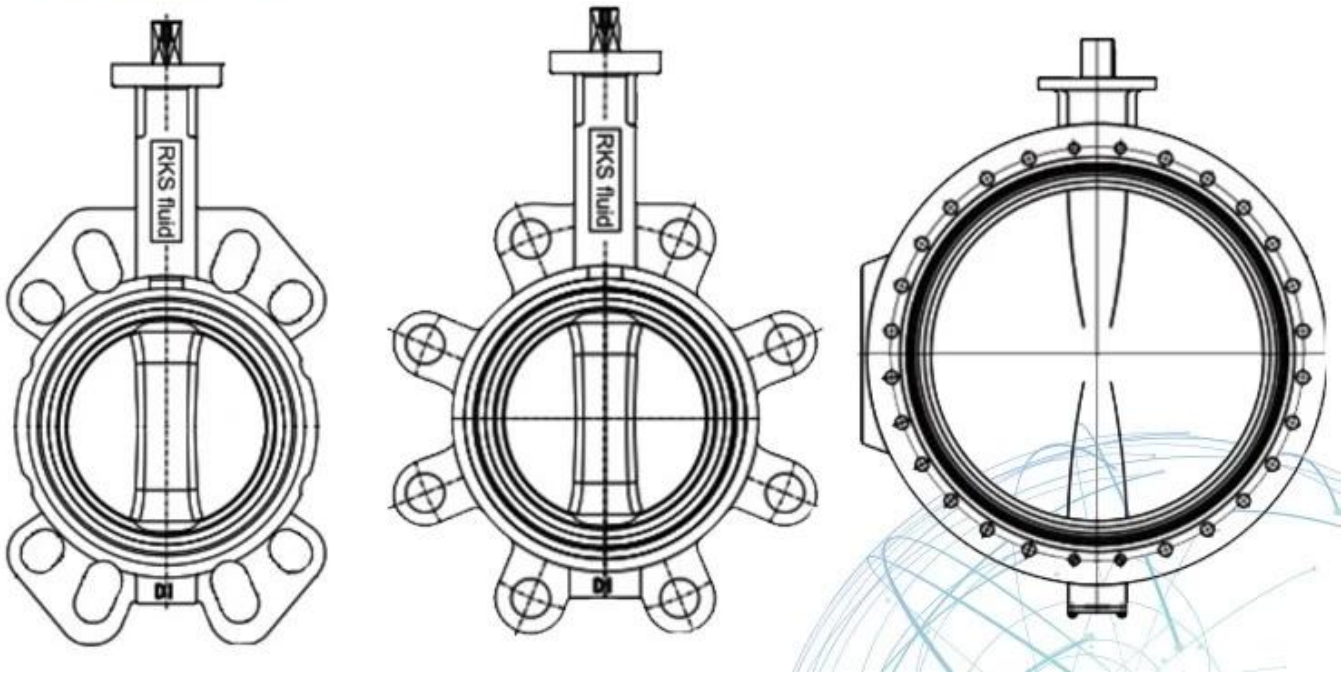

Size	DN32 - DN2400 NPS1 1/4-NPS96)
Pressure ratings	PN6 - PN10 - PN16 (Class 150)

Temperature range	-40℃-+120℃
Material	Ductile iron, Stainless steel etc.
Seat material	NBR, EPDM, Nature rubber, Silicon, Viton
Connection	Wafer, Lug, U-Section,Double flange

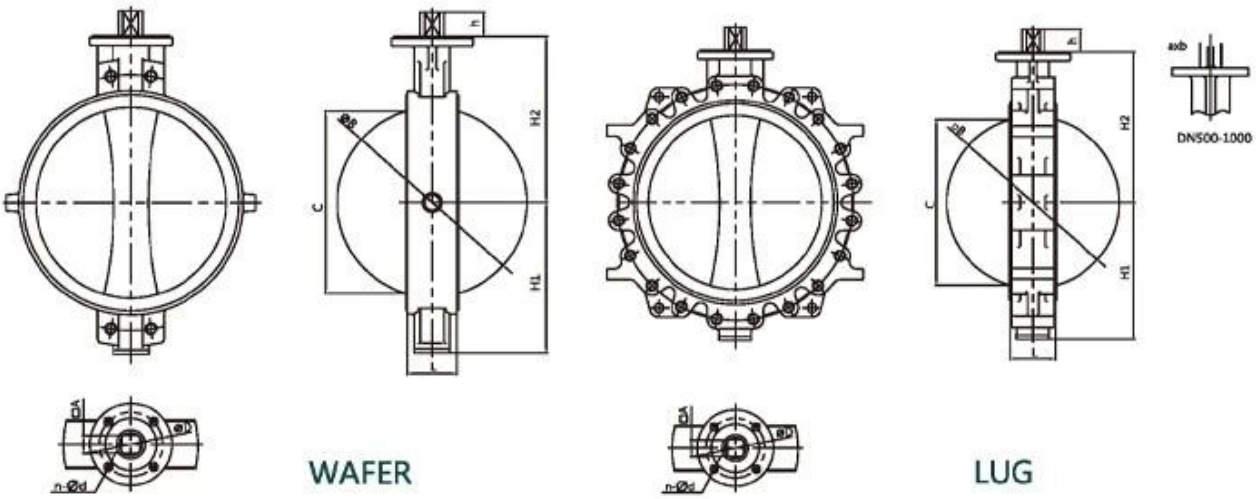

NPS14-NPS40 Wafer/Lug with alignment holes													
Size	L	H1	H2	h	A	ΦB	C	ΦG	a	b	ΦD	n-Φd	IS05211
NPS14	3.07	10.63	11.81	1.42	1.06	Φ13.31	12.95	-	-	-	Φ4.92	4-Φ0.55	F12
NPS16	4.02	11.81	13.58	1.69	1.26	Φ15.35	14.80	-	-	-	Φ5.50	4-Φ0.71	F14
NPS18	4.49	12.99	14.76	1.93	4.42	Φ17.20	16.61	-	-	-	Φ5.50	4-Φ0.71	F14
NPS20	5.00	15.16	16.73	2.56	-	Φ19.09	18.43	Φ2.36	0.71	2.52	Φ6.50	4-Φ0.87	F16
NPS24	6.06	17.24	19.49	2.76	-	Φ23.03	22.24	Φ2.36	0.71	2.52	Φ6.50	4-Φ0.87	F16
NPS28	6.50	20.39	22.44	3.15	-	Φ26.77	25.98	Φ2.76	0.79	2.93	Φ10.00	8-Φ0.71	F25
NPS30	6.50	21.46	24.02	3.15	-	Φ28.74	27.95	Φ2.76	0.79	2.93	Φ10.00	8-Φ0.71	F25
NPS32	7.48	22.32	25.20	3.15	-	Φ30.43	29.49	Φ2.76	0.79	2.93	Φ10.00	8-Φ0.71	F25
NPS36	7.99	25.59	27.56	3.94	-	Φ34.49	33.54	Φ3.15	0.87	3.35	Φ10.00	8-Φ0.71	F25
NPS40	8.50	28.15	29.53	3.94	-	Φ38.43	37.48	Φ3.15	0.87	3.35	Φ11.73	8-Φ0.87	F30

APPLICATION SCENARIO

Industrial water application | Power plant | Sea water desalination | Water treatment | Water supply and drainage | HAVC | Food and drug | Water transport

COMPANY INFORMATION

I Business area: fluid control products, technology and environmental protection products.

Ⅱ Advanced CNC machining centers, professional process cells, wide-range welding equipment, automatic assembly lines and coating.

Ⅲ China's standard reference unit, to participate in the development of relevant valve industry standards.

Ⅳ We have set up a research and development center in Houston, Texas, in the United States.

V Product Standard: GB, German Standard, American Standard, TUV CE, ISO 9001, ADWO-2000, TS, PED, WRC WRAS, KTW, API 6D, API609.

Ⅵ Main production: butterfly valve, ball valve, gate valve, check valve, globe valves, pipe fittings, manual / pneumatic / electric actuator, valve parts.

RKSfluid
Proven Technology-Superior Features-Legendary Value

RKSfluid
Proven Technology-Superior Features-Legendary Value

RKSfluid
Proven Technology-Superior Features-Legendary Value

RKSfluid
Proven Technology-Superior Features-Legendary Value

RKSfluid
Proven Technology-Superior Features-Legendary Value

RKSfluid
Proven Technology-Superior Features-Legendary Value

01
21 years of professional experience
02
4 factories
03
Independent research and development team
28 top senior professional researchers
04
2 professional testing centers
05
100% high level ex-factory inspection
06
High quality imported materials
07
2 years quality assurance, repair and replacement

COMPANY QUALIFICATION

COMPANY EXHIBITION

FAQ:

Q: If I need quotation, what informations do we need?
A: Valves' materials, Temperature, Pressure, Medium, Appllication System.

Q: Can you provide actuators, what you have?
A: Pneumatic, Electric, Hrdraulic, Solenoid Valves. RKSfluid actuators adopt USA technology. Which you need, just tell us.

Q: What's your productive capacity?
A: RKSfluid has four plants that can provide the products you need.

Q: Production lead time
A: Normal products have stock in 2~5 working days. Customized base on your need.

Q: MOQ
A: 1pc for all products.

Q: How about the quality assurance?
A: 100% quality test before delivery, 2 years warranty. Ensure your system working safety.
We got TUV, API, WRAS, CE, ISO certification.
Standard conform to DIN, ASME, BS EN, JIS, API, AWWA.

Q: How could you provide quality service to our customers?
A: RKSfluid own 20 years experiences and more than 70 R&D engineers provide technical support, model selection and installation guidance for you.