DESIGN FEATURES

DURABLE

- No-pin connection, 1 pc blow-out proof stem
- DI/CI Nodularity over 95%

ANTI-CORROSION

- Material: Epoxy powder: AkzoNobel, Earth Best!
- Coating Thickness: 200-250μm
- Spraying temp: over 200℃. Doesn't fade, even wipe with diethyl ether

QUALITY STANDARD

- 100% quality test, follow DIN, ASTM, JIS, GB/T, ISO, BS EN, API
- ONLY ONE Manufacturer get CE certification up to DN1800
- 2 years warranty. 15000 times On-off test, 30000 times Destructive experiment

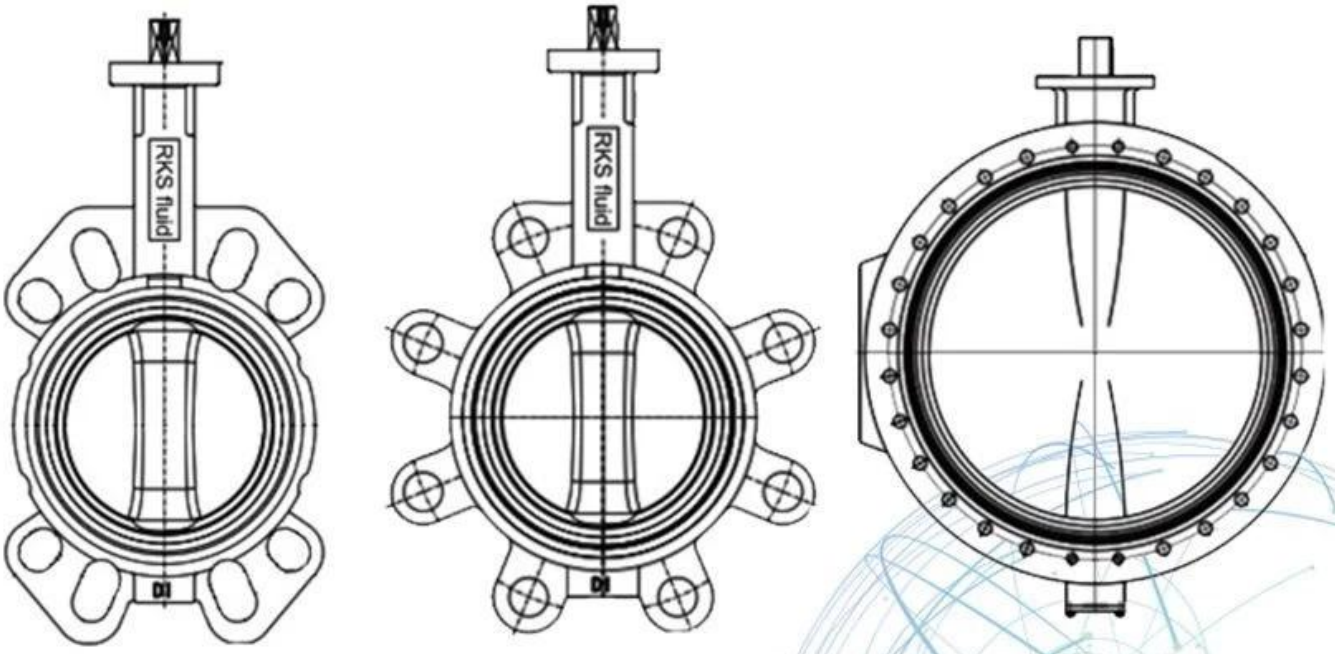

Application Scenario

Our Factory

Company Advantages

01 21 years of professional experience

02 4 factories

03 Independent research and development team
28 top senior professional researchers

04 2 professional testing centers

05 100% high level ex-factory inspection

06 High quality imported materials

07 2 years quality assurance, repair and replacement

I Business area: fluid control products, technology and environmental protection products.

Ⅱ Advanced CNC machining centers, professional process cells, wide-range welding equipment, automatic assembly lines and coating.

Ⅲ China's standard reference unit, to participate in the development of relevant valve industry standards.

IV We have set up a research and development center in Houston, Texas, in the United States.

V Product Standard: GB, German Standard, American Standard, TUV CE, ISO 9001, ADWO-2000, TS, PED, WRC WRAS, KTW, API 6D, API609.

VI Main production: butterfly valve, ball valve, gate valve, check valve, globe valves, pipe fittings, manual / pneumatic / electric actuator, valve parts.

Exhibition Photos

Our Certificates

FAQ

Q: If I need quotation, what informations do we need?
A: Valves' materials, Temperature, Pressure, Medium, Appllication System.

Q: Can you provide actuators, what you have?
A: Pneumatic, Electric, Hrdraulic, Solenoid Valves. RKSfluid actuators adopt USA technology. Which you need, just tell us.

Q: What's your productive capacity?
A: RKSfluid has four plants that can provide the products you need.

Q: Production lead time
A: Normal products have stock in 2~5 working days. Customized base on your need.

Q: MOQ
A: 1pc for all products.

Q: How about the quality assurance?
A: 100% quality test before delivery, 2 years warranty. Ensure your system working safety.
We got TUV, API, WRAS, CE, ISO certification.
Standard conform to DIN, ASME, BS EN, JIS, API, AWWA.

Q: How could you provide quality service to our customers?
A: RKSfluid own 20 years experiences and more than 70 R&D engineers provide technical support, model selection and installation guidance for you.