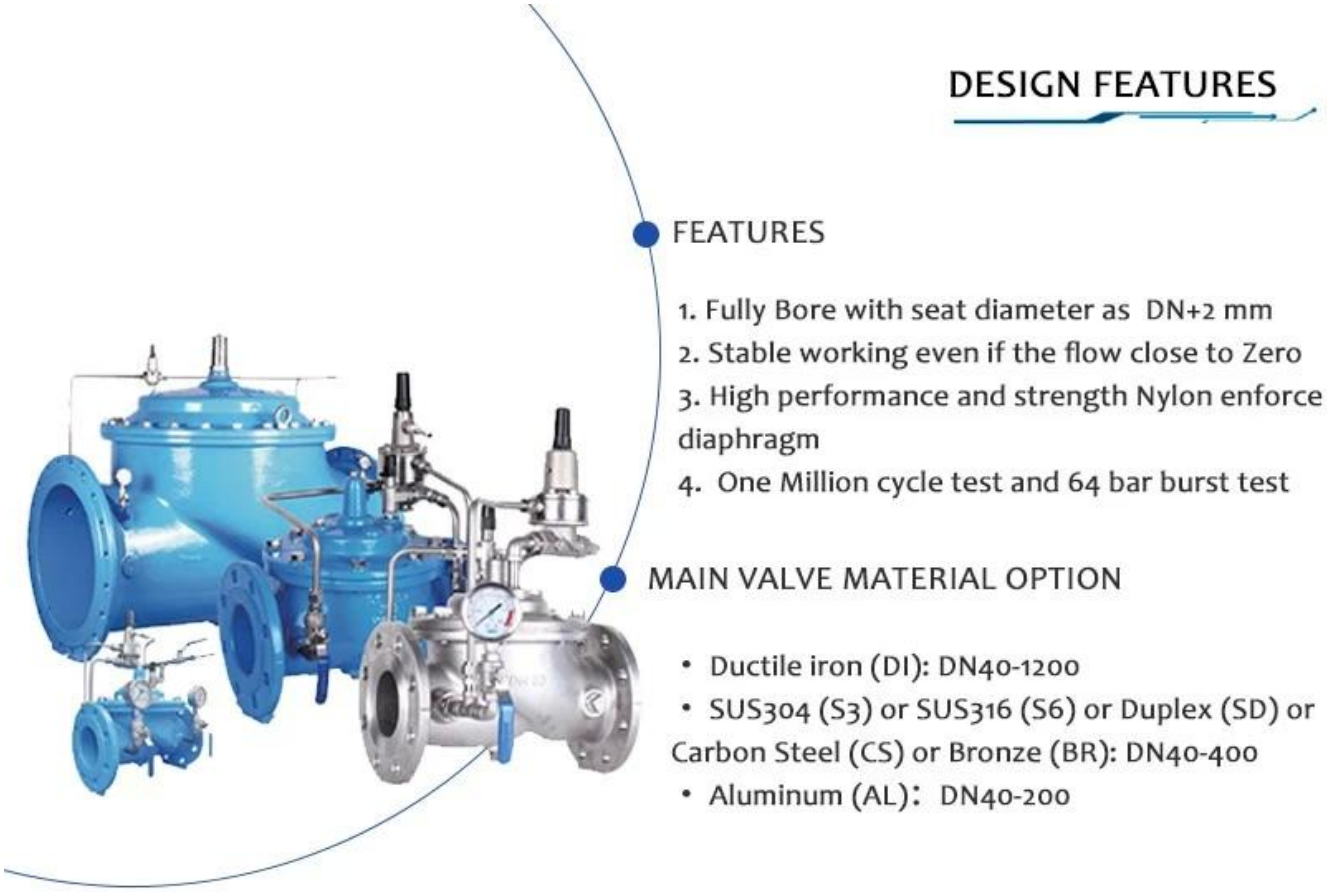

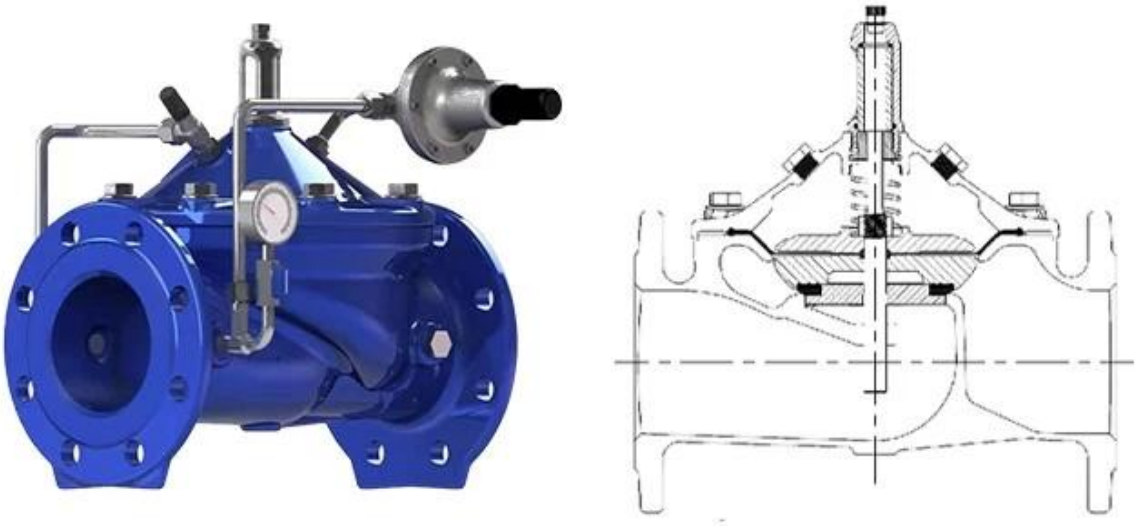

Features

Fully bore globe pattern design, lowest head loss while fully open
Keep stable working condition even the flow rate close to zero
High sensitive and strength fabric reinforced diaphragm
- 1000000 cycles test between fully close and open with working pressure
- 5 times of working pressure destructive test

Most components are machined by CNC
Fusion bonded epoxy coating process is based on GSK & WIS standard
High standard production test
- Seal test: Low pressure 0.5 bar
High pressure 1.1xPN+1 bar
- Shell test: 1.5xPN+1 bar
- Pressure modulated vibration: +/-0.2 bar
Data collected automatically 1000 times/sec, display with static or dynamic chart
Easy installation, operation and free maintenance
Different materials with WRAS/KTW/NSF/FDA/ACS certification to meet different market

Size	DN40-DN1200
Working Medium	Water
Temperature	0°C~70°C
Material	Ductile Iron/Stainless Steel/Cast Steel/Bronze/Aluminum Alloy
Design Standards	CJ/T 219 & JB/T 10674 & EN 1074-5
Pressure Level	PN10, PN16, PN25
Stress Test Standard	GB/T 13927 & ISO 5208 &EN12266-1
Flange drilling standard	GB17241.6; EN1092-2; ISO7005-2; ANSI / JIS / AS2129
Structure Length	GB 12221 & EN558-1

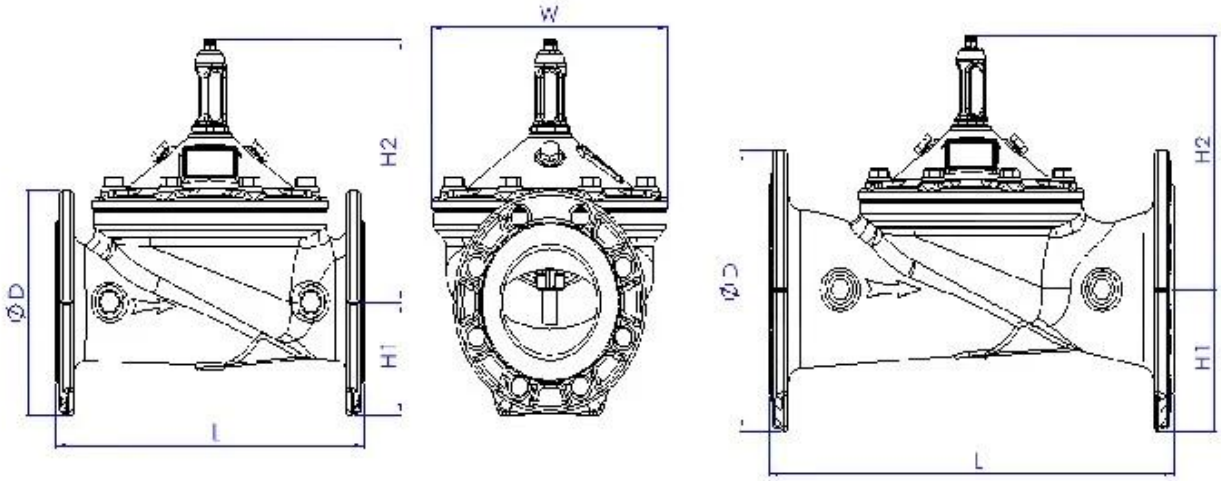

DN	L	H	H1	DN	L	H	H1
40	230	139	85	250	730	476	205
50	230	139	85	300	850	526	232
65	290	159	95	350	980	585	262
80	310	179	102	400	1100	624	292
100	350	214	112	500	1250	720	360
125	400	278	127	600	1450	835	425
150	480	333	145	800	1850	1110	515
200	600	407	172	1000	2250	1350	630

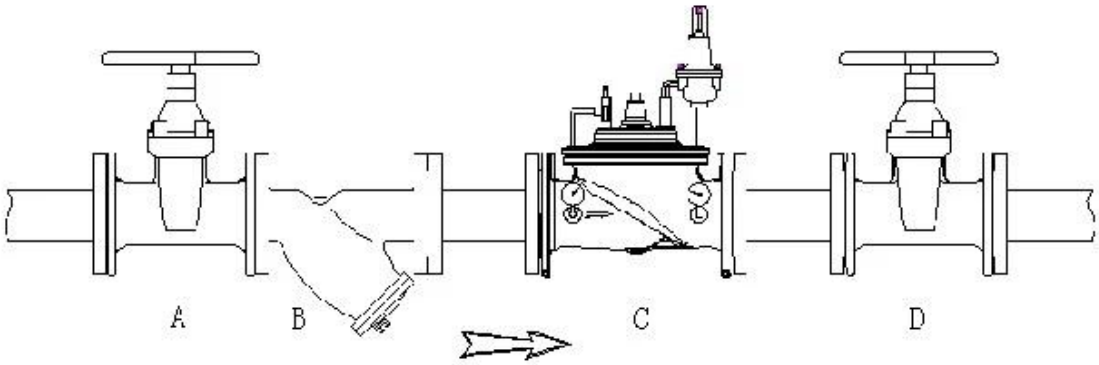

Application Area
urban water supply and industrial agricultural water transmission lines,etc.

Working Principle
pressure reducing valve is an accurate and pilot controlled valve It can be reduce a high inlet water pressure to a steady downstream pressure regardless of the inlet water pressure chanding.

I Business area: fluid control products, technology and environmental protection products.

Ⅱ Advanced CNC machining centers, professional process cells, wide-range welding equipment, automatic assembly lines and coating.

Ⅲ China's standard reference unit, to participate in the development of relevant valve industry standards.

IV We have set up a research and development center in Houston, Texas, in the United States.

V Product Standard: GB, German Standard, American Standard, TUV CE, ISO 9001, ADWO-2000, TS, PED, WRC WRAS, KTW, API 6D, API609.

VI Main production: butterfly valve, ball valve, gate valve, check valve, globe valves, pipe fittings, manual / pneumatic / electric actuator, valve parts

Exhibition Photos

FAQ

Q: If I need quotation, what informations do we need?
A: Valves' materials, Temperature, Pressure, Medium, Appllication System.

Q: Can you provide actuators, what you have?
A: Pneumatic, Electric, Hrdraulic, Solenoid Valves. RKSfluid actuators adopt USA technology. Which you need, just tell us.

Q: What's your productive capacity?
A: RKSfluid has four plants that can provide the products you need.

Q: Production lead time
A: Normal products have stock in 2~5 working days. Customized base on your need.

Q: MOQ
A: 1pc for all products.

Q: How about the quality assurance?
A: 100% quality test before delivery, 2 years warranty. Ensure your system working safety. We got TUV, API, WRAS, CE, ISO certification.

Standard conform to DIN, ASME, BS EN, JIS, API, AWWA.

Q: How could you provide quality service to our customers?
A: RKSfluid own 20 years experiences and more than 70 R&D engineers provide technical support, model selection and installation guidance for you.