RKSfluid®
A key Valve in Flow Control
Butterfly Valve
Ball Valve
Gate Valve
Globe Valve
Check Valve
Pipe Fittings

Introduction

Our Aluminum valve handwheel gearbox, 90 ° slewing drive device is suitable for butterfly valve, ball valve and plug valve and so on. The aluminum alloy material body after static electricity powder coating has an excellent appearance, strong adhesion/mechanical property and anti-corrosion/wear resistance.

Square: 8/ 9/ 11/ 14/ 17/ 19/ 22/ 27

ISO 5211 Flange Type: F05/ F07/ F09/ F10/ F12/ F14/ F16/ F25

Features

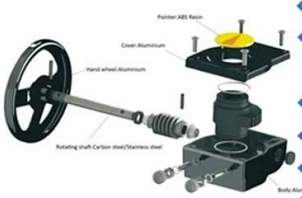

- ISO 5211 direct mount patterns.
- Filled with special lubricant before leaving the factory.
- Weatherproof is IP 65.
- The output torque range: 180-5500NM
- 5 degrees angle adjusting.
- All aluminum shell light and beautiful.

Application Scenario

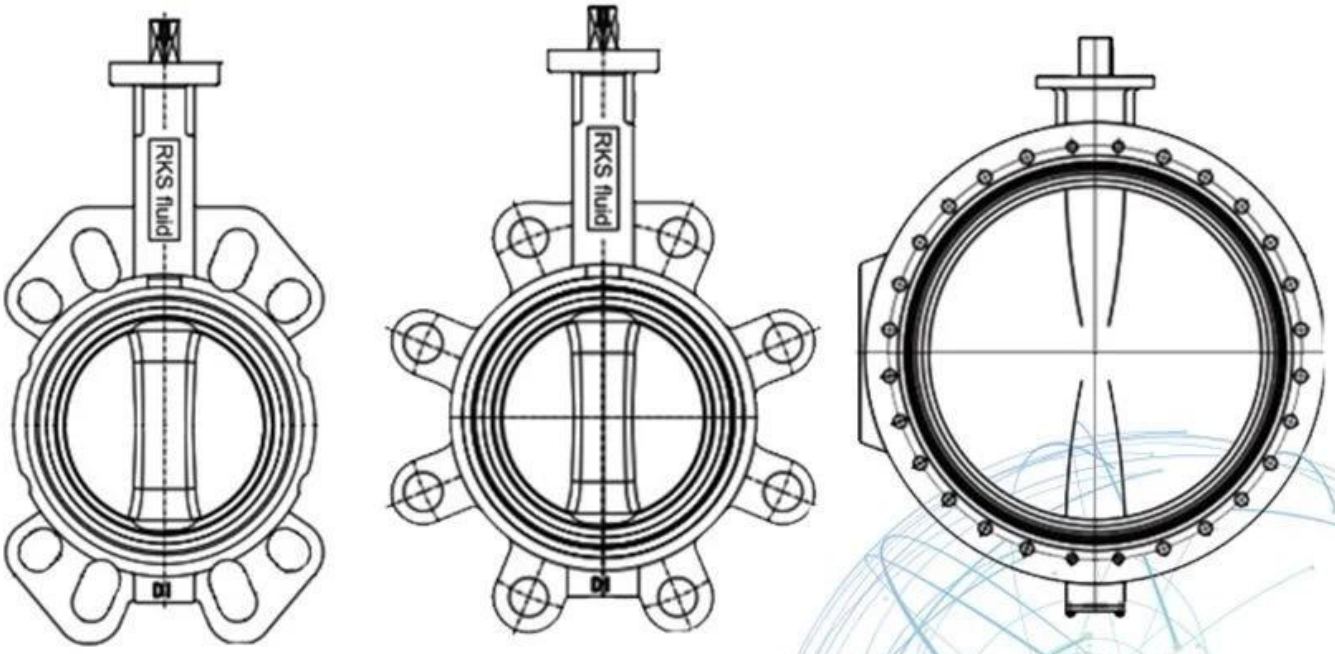

Application Scenario

Our Factory

Company Advantages

01 21 years of professional experience

02 4 factories

03 Independent research and development team
28 top senior professional researchers

04 2 professional testing centers

05 100% high level ex-factory inspection

06 High quality imported materials

07 2 years quality assurance, repair and replacement

RKSfluid was founded in 1997. We are a production workshop for both foundry and machining, research & development center, and quality inspection center. The manufacturing facilities include CNC machining centers, professional processing cells, broad spectrum welding equipment, automatic assembling and coating lines. We have built a team for design, research & development. Our new testing center as a public service platform testing center in
Liaoning Province, Become the standard GB of the Chinese valve reference unit, to participate
in the development of the relevant valve industry standards. In order to accelerate the expansion of overseas business and resources integration, and to support the success of RKS fluid sales in the USA, German, Russia. We have US Agent. Our product design standards cover: GB, ISO, German and American Standard, approved by TUV for CE and ADWO- 2000, ISO9001, TS, API. Our products: Manual, Pneumatically & electrically operated Ball valves, Butterfly valves and Gate Valves. Check Valves, Automatic Control Valves. Castings and Fittings: Valve bodies, Bonnets, Discs, Stems, Gear Box, Universal Couplings, Flange Adaptors,
Tapping Saddles.After years of development, we continue to improve and seek out innovation while adhering to "Proven Technology, Superior Features and Legendary Value" as our product value philosophy. Customer satisfaction is our working goal!RKSfluid was founded in 1997.
We are a production workshop for both foundry and
machining, research & development center, and quality inspection center. The manufacturing facilities include CNC machining centers, professional processing cells, broad spectrum welding equipment, automatic assembling and coating lines. We have built a team for design, research & development. Our new testing center as a public service platform testing center in
Liaoning Province, Become the standard GB of the Chinese valve reference unit, to participate
in the development of the relevant valve industry standards. In order to accelerate the expansion of overseas business and resources integration, and to support the success of RKS fluid sales in the USA, German, Russia. We have US Agent. Our product design standards cover: GB, ISO, German and American Standard, approved by TUV for CE and ADWO- 2000,

ISO9001, TS, API. Our products: Manual, Pneumatically & electrically operated Ball valves, Butterfly valves and Gate Valves. Check Valves, Automatic Control Valves. Castings and Fittings: Valve bodies, Bonnets, Discs, Stems, Gear Box, Universal Couplings, Flange Adaptors,
Tapping Saddles.After years of development, we continue to improve and seek out innovation while adhering to "Proven Technology, Superior Features and Legendary Value" as our product value philosophy. Customer satisfaction is our working goal!
I Business area: fluid control products, technology and environmental protection products.

Ⅱ Advanced CNC machining centers, professional process cells, welding equipment, automatic assembly lines and coating.

Ⅲ China's standard reference unit, to participate in the development of relevant valve industry standards.

Ⅳ We have set up a research and development center in Houston, Texas, in the United States.

Ⅴ Product Standard: GB, German Standard, American Standard, TUV CE, ISO 9001, ADWO-2000, TS, PED, WRC WRAS, KTW, API 6D, API609.

Ⅵ Main production: butterfly valve, ball valve, gate valve, check valve, globe valves, pipe fittings, manual / pneumatic / electric actuator, valve parts.

Exhibition Photos

FAQ

Q: If I need quotation, what informations do we need?
A: Valves' materials, Temperature, Pressure, Medium, Appllication System.

Q: Can you provide actuators, what you have?
A: Pneumatic, Electric, Hrdraulic, Solenoid Valves. RKSfluid actuators adopt USA technology. Which you need, just tell us.

Q: What's your productive capacity?
A: RKSfluid has four plants that can provide the products you need.

Q: Production lead time
A: Normal products have stock in 2~5 working days. Customized base on your need.

Q: MOQ
A: 1pc for all products.

Q: How about the quality assurance?
A: 100% quality test before delivery, 2 years warranty. Ensure your system working safety.
We got TUV, API, WRAS, CE, ISO certification.
Standard conform to DIN, ASME, BS EN, JIS, API, AWWA.

Q: How could you provide quality service to our customers?
A: RKSfluid own 20 years experiences and more than 70 R&D engineers provide technical support, model selection and installation guidance for you.