Features

Air Release valve

Size range:DN25-DN300
Pressure ratings:PN10 PN16
Body:Ductile Iron
Trim:SS304 SS316 etc
Connection:ARVS/KARS-BPT threaded, KARX-Flanged
Working temperature: -10°C~+80°C

Описание:
1.Advanced design with simple mechanism, strong float to prevent cracking during sudden water hammer& quick closure. 2.Aerokinetic mechanism to resist blow shut under higher air velocity even up to sonic velocity of air. 3.Bottom rubber buffer for collision prevention, and drain easy with proper holes around the cage during vacuum. Outside screen will be an option for safety and prevent insects or birds in. 4.No arms or levers to prevent vibrating, bending, direct closure of the float.Smooth cage outside of the float, keep float moving in specified guide rail. 5.Comply with BS EN 1074-4

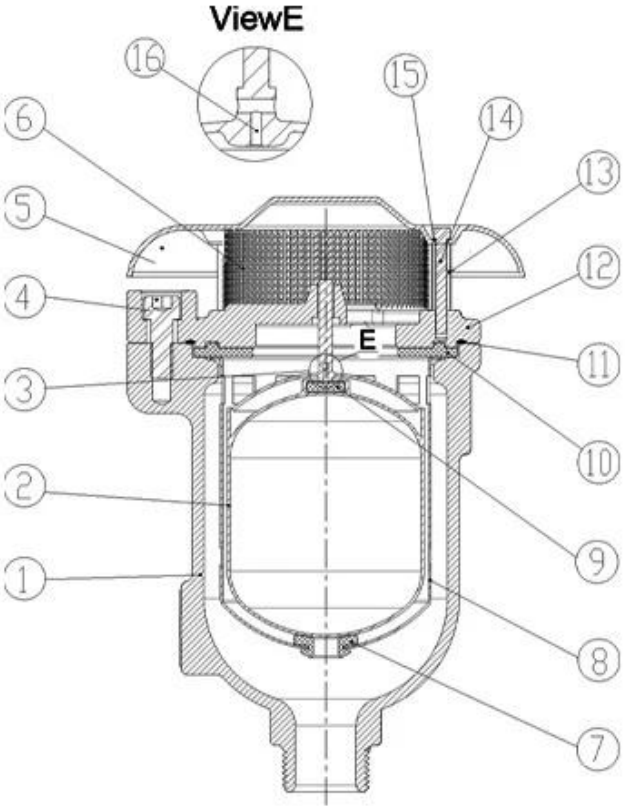

DN25-DN50

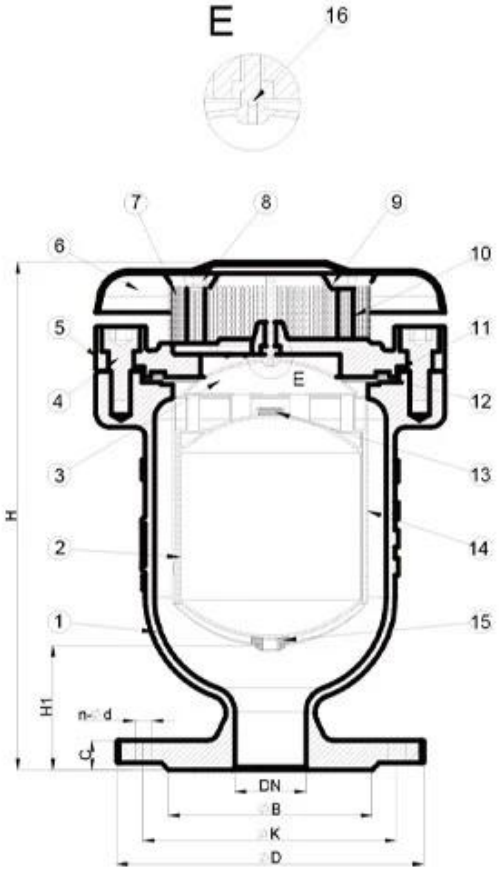

DN50-DN300

Our Factory

RKSfluid was founded in 1997. We are a production workshop for both foundry and
machining, research & development center, and quality inspection center. The manufacturing
facilities include CNC machining centers, professional processing cells, broad

spectrum
welding equipment, automatic assembling and coating lines. We have built a team for design,
Исследования и разработки. Our new testing center as a public service platform testing center in
Liaoning Province, Become the standard GB of the Chinese valve reference unit, to participate
in the development of the relevant valve industry standards. In order to accelerate the
expansion of overseas business and resources integration, and to support the success of RKS
fluid sales in the USA, German, Russia. We have US Agent. Our product design standards
cover: GB, ISO, German and American Standard, approved by TUV for CE and ADWO- 2000,
ISO9001, TS, API. Our products: Manual, Pneumatically & electrically operated Ball valves,
Butterfly valves and Gate Valves. Check Valves, Automatic Control Valves. Castings and
Fittings: Valve bodies, Bonnets, Discs, Stems, Gear Box, Universal Couplings, Flange Adaptors,
Tapping Saddles.After years of development, we continue to improve and seek out innovation
while adhering to "Proven Technology, Superior Features and Legendary Value" as our
product value philosophy. Customer satisfaction is our working goal!
I Бизнес -область: Продукты управления жидкостью, технологии и продукты защиты окружающей среды.

II Advanced CNC machining centers, professional process cells, welding equipment, automatic assembly lines and coating.

III Стандартная справочная единица Китая, чтобы принять участие в разработке соответствующих стандартов отрасли клапанов.

IV Мы создали центр исследований и разработок в Хьюстоне, штат Техас, в Соединенных Штатах.

V Стандарт продукта: GB, German Standard, American Standard, TUV CE, ISO 9001, ADWO-25000, TS, PED, WRC WRAS, KTW, API 6D, API609.

VI Main production: butterfly valve, ball valve, gate valve, check valve, globe valves, pipe fittings, manual / pneumatic / electric actuator, valve parts.

Exhibition Photos