[illegible] [illegible] [illegible] [illegible] [illegible] ([illegible])

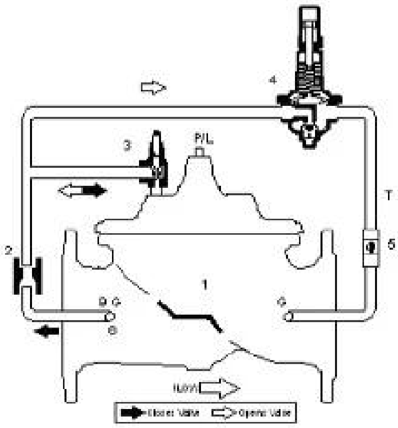

[illegible]:

[illegible]

[illegible]

[illegible]

- [illegible] 10,00000 [illegible]

- 5 [illegible]

[illegible] CNC

[illegible] GSK & WIS

[illegible]

- [illegible]: [illegible] 0.5 [illegible]

[illegible] 1.1xpn+1 [illegible]

- [illegible]: 1.5xpn+1 [illegible]

- [illegible]: +/- 0.2 [illegible]

[illegible] 1,000 [illegible]/[illegible]

[illegible]

[illegible] WRAS/KTW/NSF/FDA/ACS [illegible]

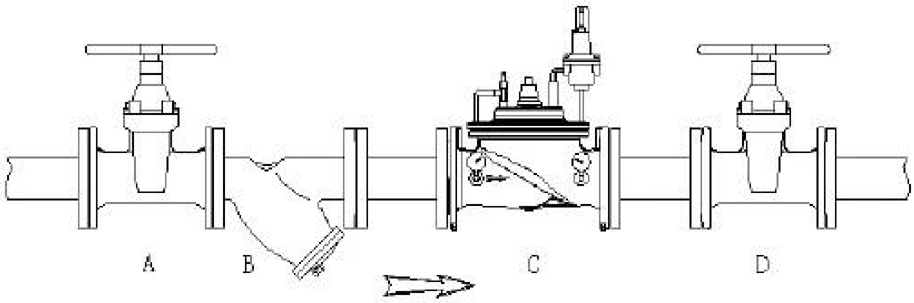

A. Shutoff valve B. Strainer C. PRV D. Shutoff valve

[illegible]

[illegible] [illegible] [illegible]

[illegible]

[illegible]

[illegible]

[illegible]	DN40-DN1200
[illegible]	[illegible]
[illegible]	0 ℃ ~ 70 ℃
[illegible]	[illegible]/[illegible]/[illegible]/[illegible]/[illegible]

DN	l	[illegible]	H1	DN	l	[illegible]	H1
40	230	139	85	250	730	476	205
50	230	139	85	300	850	526	232
65	290	159	95	350	980	585	262
80	310	179	102	400	1100	624	292
100	350	214	112	500	1250	720	360
125	400	278	127	600	1450	835	424
150	480	333	145	800	[illegible].[illegible]. 1850	1110	515
200	600	407	172	1,000	2250	1350	630

COMPANY INFORMATION

i[illegible]: [illegible]

ii[illegible] CNC [illegible], [illegible], [illegible],

[illegible]

iii[illegible]

iv□□

v□□□□□□□□□□□□□□□□□□□□: GB, □□□□□□□□□□□□□□□□, □□□□□□□□□□□□□□□□□□, TUV CE, ISO 9001, ADWO-2000, TS, PED, WRC WRAS, KTW, API 6D, API609

VI □□□□□□□□□□□□□□: □□□□□□□□□□□□□□□, □□□□□□□□□□, □□□□□□□□□□□□, □□□□□□□□□□□□□□□, □□□□□□□□□□□□□, □□□□□□□□□□□□, □□□□□□□ / □□□□□□□□□□ / □□□□□□□□□□□□□□□□□□□□, □□□□□□□□□□□□□□□□

COMPANY FACTORY

01
21 years of professional experience
02
4 factories
03
Independent research and development team
28 top senior professional researchers
04
2 professional testing centers
05
100% high level ex-factory inspection
06
High quality imported materials
07
2 years quality assurance, repair and replacement

COMPANY QUALIFICATION

COMPANY EXHIBITION

□□□□□□□□□□□□□□□□□□

□□□: □□□?

□□□: □□□

□□□: □□□□□□□□□□□□□□□□□□□□□□□□□□□□□□□□□□□□?

A: □□, □□□□□, hrdraulic, □□□□□□□□□□□□□□□□RKSfluid Actuators

□□□

[illegible]: [illegible]?

[illegible]: RKSfluid [illegible]

[illegible]: [illegible]

[illegible]: [illegible] 2 ~ 5 [illegible]

[illegible]: MOQ

A: 1pc [illegible]

[illegible]: [illegible]?

[illegible]: [illegible] 100% [illegible] 2

[illegible]

[illegible] TUV, API, WRAS, CE, [illegible] ISO

[illegible] DIN, ASME, BS EN, JIS, API, AWWA

[illegible]: [illegible]?

[illegible]: RKSfluid [illegible] 20 [illegible] R&D [illegible] 70

[illegible]