[illegible] [illegible]
[illegible]
[illegible]
[illegible] ([illegible])

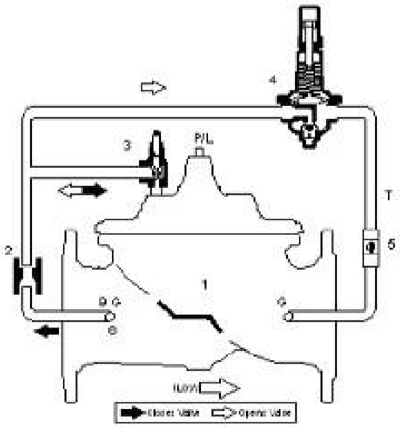


**[illegible]:**

[illegible]

[illegible]

[illegible]

- [illegible] 10,00000 [illegible]

- 5 [illegible]

[illegible] CNC

[illegible] GSK & WIS

[illegible]

- [illegible]: [illegible] 0.5 [illegible]

[illegible] 1.1xpn+1 [illegible]

- [illegible]: 1.5xpn+1 [illegible]

- [illegible]: +/- 0.2 [illegible]

[illegible] 1,000 [illegible]/[illegible]

[illegible]

[illegible] WRAS/KTW/NSF/FDA/ACS [illegible]

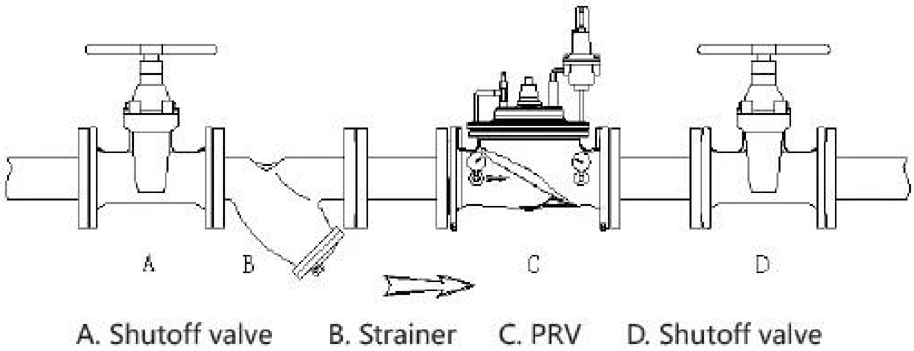


□□□□□□□□□□□□□□□□

□□□□□□□□□□□□□□□□□□□□□□□□□□ □□□□□□□□□□□□ □□□

□□□□□□□□□□□

□□□□□□□□□□□□□□□□□□□□□□□□□□□□□□□□□□□□□□□□□□□□□

□□□□□□□□□□□□□□□□□□□□□□□□□□□□□□□□□□□□□□□□□□□□□□□□□□□□□□□□□□□□□□□□□□□□□□□□□□□

| | |
|---|---|
| □□□□ | DN40-DN1200 |
| □□□□□□□□□□□□□□ | □□□ |
| □□□□□□□ | 0 ℃ ~ 70 ℃ |
| □□□□□ | □□□□□□□□□□/□□□□□□□□□□□/□□□□□□□□/□□□□□/□□□□□□□□□□□□□□□□ |

| DN | l | □□ | H1 | DN | l | □□ | H1 |
|---|---|---|---|---|---|---|---|
| 40 | 230 | 139 | 85 | 250 | 730 | 476 | 205 |
| 50 | 230 | 139 | 85 | 300 | 850 | 526 | 232 |
| 65 | 290 | 159 | 95 | 350 | 980 | 585 | 262 |
| 80 | 310 | 179 | 102 | 400 | 1100 | 624 | 292 |
| 100 | 350 | 214 | 112 | 500 | 1250 | 720 | 360 |
| 125 | 400 | 278 | 127 | 600 | 1450 | 835 | 424 |
| 150 | 480 | 333 | 145 | 800 | □.□. 1850 | 1110 | 515 |
| 200 | 600 | 407 | 172 | 1,000 | 2250 | 1350 | 630 |

## COMPANY INFORMATION

i[illegible]: [illegible]

ii[illegible] CNC [illegible], [illegible], [illegible],

[illegible]

iii[illegible]

iv□□□□□□□□□□□□□□□□□□□□□□□□□□□□□□□□□□□□□□□□□□□□□□□□□□□□□□□□□□□□□□□□□□□□□

v□□□□□□□□□□□□□□□□□□: GB, □□□□□□□□□□□□□□□□□□□, □□□□□□□□□□□□□□□□□□□, TUV CE, ISO 9001, ADWO-2000, TS, PED, WRC WRAS, KTW, API 6D, API609

VI □□□□□□□□□□□□□: □□□□□□□□□□□□□□, □□□□□□□□□, □□□□□□□□□□□□, □□□□□□□□□□□□□□, □□□□□□□□□□□□□, □□□□□□□□□□□□, □□□□□□□ / □□□□□□□□□ / □□□□□□□□□□□□□□□□□□□□, □□□□□□□□□□□□□□□

## COMPANY FACTORY

01
21 years of professional experience
02
4 factories
03
Independent research and development team
28 top senior professional researchers
04
2 professional testing centers
05
100% high level ex-factory inspection
06
High quality imported materials
07
2 years quality assurance, repair and replacement

## COMPANY QUALIFICATION

## COMPANY EXHIBITION

[illegible]

[illegible]: [illegible]?

[illegible]: [illegible]

[illegible]: [illegible]?

A: [illegible], [illegible], hrdraulic, [illegible]RKSfluid Actuators

[illegible]

**[illegible]: [illegible]?**

[illegible]: RKSfluid [illegible]

**[illegible]: [illegible]**

[illegible]: [illegible] 2 ~ 5 [illegible]

**[illegible]: MOQ**

A: 1pc [illegible]

**[illegible]: [illegible]?**

[illegible]: [illegible] 100% [illegible] 2
[illegible]
[illegible] TUV, API, WRAS, CE, [illegible] ISO
[illegible] DIN, ASME, BS EN, JIS, API, AWWA

**[illegible]: [illegible]?**

[illegible]: RKSfluid [illegible] 20 [illegible] R&D [illegible] 70
[illegible]