DESIGN FEATURES

1.Elastic stainless steel sealing ring,"0"leakage

2.Fireproof structural design,blow-out proof stems

3.Auto welding plasma powder surfacing valve seat

4.Hollow design,reduces flow resistance

5.Interchangeable DSS entity seal / multiple-piece

6.stainless and graphite seal

7.ISO5211 Mounting platform,simple connection

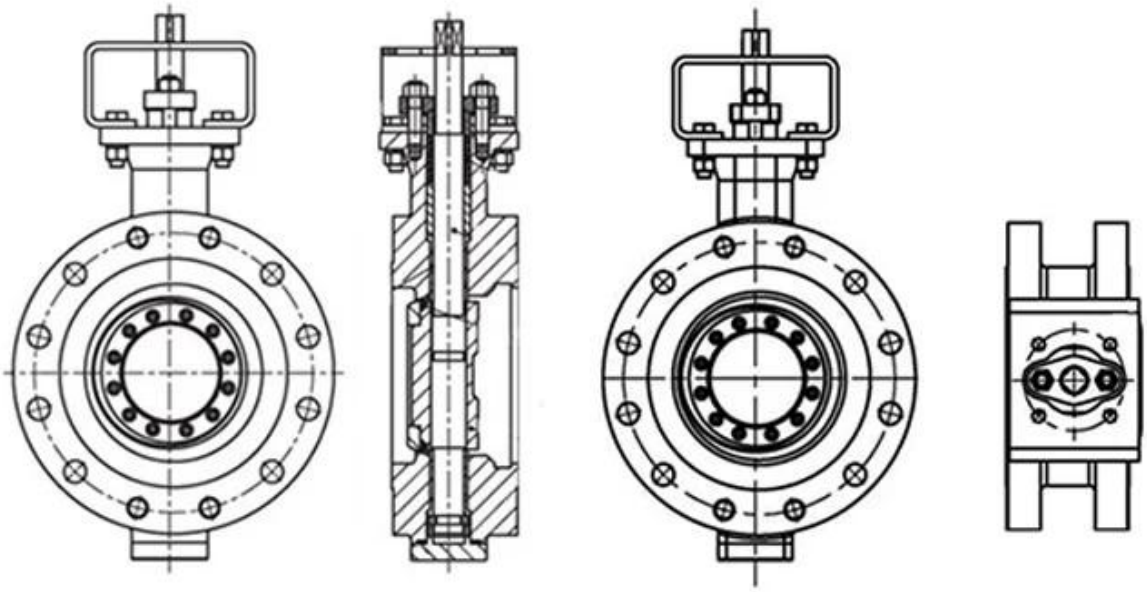

APPLICATION SCENARIO

Industrial water application | Power plant | Sea water desalination | Water treatment | Water supply and drainage | HAVC | Food and drug | Water transport

COMPANY INFORMATION

i□□□□□□□□□□□□□□: □□

ii□□□□□□□□□□□□□□□□□□ CNC □□□□□□□, □□□□□□□□□□□□□□□□□□□□□□□, □□□□□□□□□□□□□□□□□□□□□□□□,
□□□□□□□□□□□□□□□□□□□□□□□□□□□□□□□□□

unit □□□
□□□□□□□□□□

iv□□□

v□□□□□□□□□□□□□□□□: GB, □□□□□□□□□□□□□□, □□□□□□□□□□□□□□□, TUV CE, ISO 9001,
ADWO-2000, TS, PED, WRC WRAS, KTW, API 6D, API609

VI □□□□□□□□□□□: □□□□□□□□□□□□, □□□□□□□, □□□□□□□□□, □□□□□□□□□□□□, □□□□□□□□□□□,
□□□□□□□□□□, □□□□□□ / □□□□□□□□ / □□□□□□□□□□□□□□□□□, □□□□□□□□□□□□□

COMPANY QUALIFICATION

COMPANY EXHIBITION

□□□□□□□□□□□□□□□□□

□□□: □□?
□□□: □□

□□□: □□□?
□□□: □□□□□□□□□□, □□□□□□, hrdraulic, □□□□□□□□□□□□□□□□□□ RKSfluid Actuators □□□□□□□□□□□□□□□□□□□□□□□□
□□□□□□□□ □□□□□□□□□□□□□□□□□□□□□□□□□□□□□□□□

□□□: □□□?
□□□: RKSfluid □□

□□□: □□□□□□□□□□□□□□□□
□□□: □□□□□□□□□□□□□□□□□□□□□□□□□□ 2 ~ 5 □□□□□□□□□□ □□

□□□: moq
A: 1pc □□□□□□□□□□□□□□□□□□□□□□□□□□

□□□: □□□□□□□□□□□□□□□□□□□□□□□□□□□□□□□□□□□?
□□□: □□□□□□□□□□□□□□□□□ 100% □□□□□□□□□□□□□□□□□□□□□□□□□ 2 □□ □□□□□□□□□□□□□□□□□□□□□□□□□□□□□□□□□
□□□□□□□□□□□□□□□□□□□□
□□□□□□□□□□ TUV, API, WRAS, CE, □□□□□□□□□□ ISO
□□□□□□□□□□□□□□□□□□□□ DIN, ASME, BS EN, JIS, API, AWWA

□□□: □□□?
□□□: RKSfluid □□□□□□□□□□□□□□□□□□□□□□□□□ 20 □□□□□□□□□□□□ R&D □□□□□□□□ 70 □□□□□□□□□□□□□□□□□□□
□□□