RKSfluid®
A key Valve in Flow Control
Butterfly Valve
Ball Valve
Gate Valve
Globe Valve
Check Valve
Pipe Fittings

DESIGN FEATURES

DURABLE

- **1 piece** non-welded **PFA** molded **DSS** Disc stem
- **Precision casting** WCB/CF8M Bodies

TRIPLE SEAL

- **Triple Seal**: Spring loaded Mechanical seal, Radial Lip Seal, FPM
- China **ONLY ONE** Manufacturer **400Mpa Isostatic pressing** PTFE seat, **consistent density**

ANTI-CORROSION

- **Material: Epoxy powder: AkzoNobel, Earth Best!**
- Coating Thickness: **200-250μm**
- Spraying temp: over **200℃**. Doesn't fade, even wipe with diethyl ether

QUALITY STANDARD

- **100% quality test**, follow DIN, ASTM, JIS, GB/T, ISO, BS EN, API
- **ONLY ONE** Manufacturer get **CE** certification up to **DN1800**
- **2 years** warranty. **15000** times On-off test, **30000** times Destructive experiment

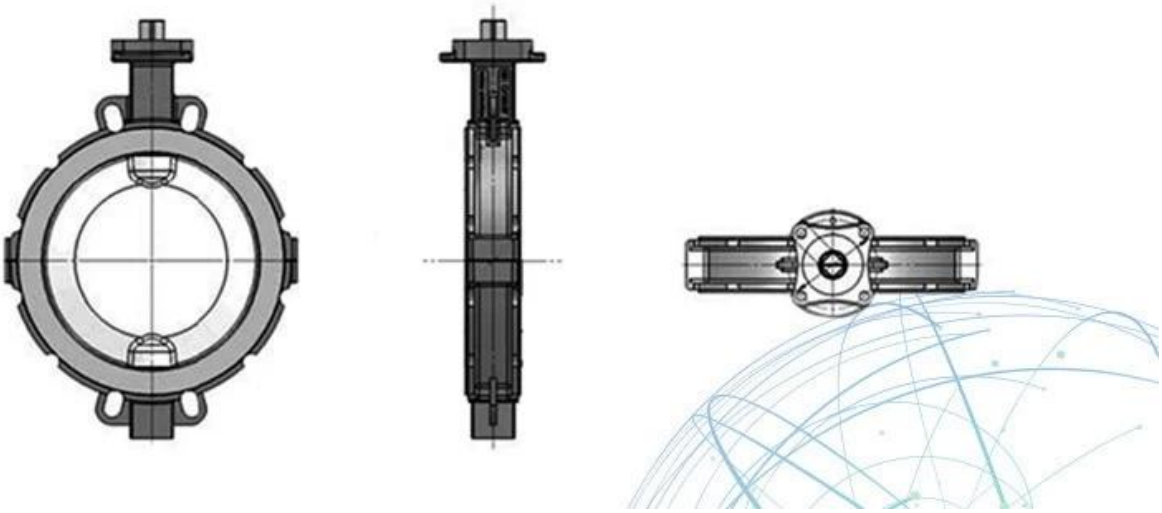

APPLICATION SCENARIO

Industrial water application | Nuclear plant | Petroleum | Steel | Wastewater treatment | Acid-base | Food | Irrigation

Our Factory

Company Advantages
01
21 years of professional experience
02
4 factories
03
Independent research and development team
28 top senior professional researchers
04
2 professional testing centers
05
100% high level ex-factory inspection
06
High quality imported materials
07
2 years quality assurance, repair and replacement

RKSfluid
RKSfluid

area □□□□□□□□□□□□□□: □□□□□□□□□□□□□□

ADWO-2000, TS, PED, WRC WRAS, KTW, API 6D, API609

VI □□□□□□□□□□□□: □□□□□□□□□□□□□, □□□□□□□□□, □□□□□□□□□□□, □□□□□□□□□□□□□, □□□□□□□□□, □□□□□□□□ □□□, □□□□□□ / □□□□□□□□□ / □□□□□□□□□□□□□□□□□, □□□□□□□□□□□□□□

Exhibition Photos

Our Certificates

□□□□□□□□□□□□□□□□

□□□: □□□□□□□□□□□□□□□□□