DESIGN FEATURES

This series of butterfly valves are used for industrial pipelines, as bi-directional open and close and regulation devices, the adjustment range is from 40°C-90°C full open.Suitable temperature≥ 80°C

Features

- Size range DN100-1200mm
- Standard-ISO/BS/DIN/AWWA/API
- Tests Standard-BS EN 12266-1
- Body-Ductile Iron/Cast Iron/Stainless Steel /WCB
- Body Ring-SS420/SS304/SS316
- Disc Ring-EPDM
- Shaft-SS420/SS431/SS316
- Fusion bonded epoxy coating-Min 300 Microns

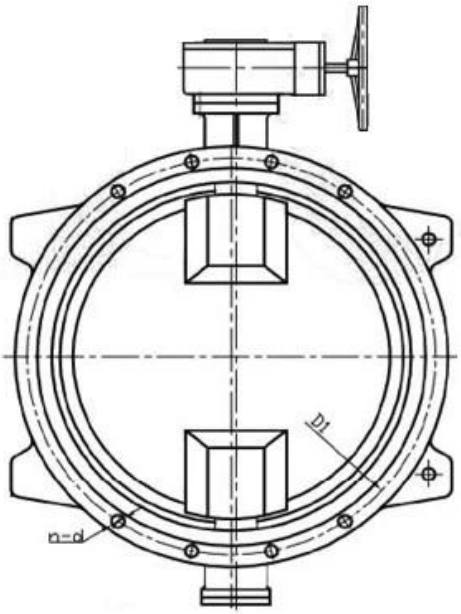

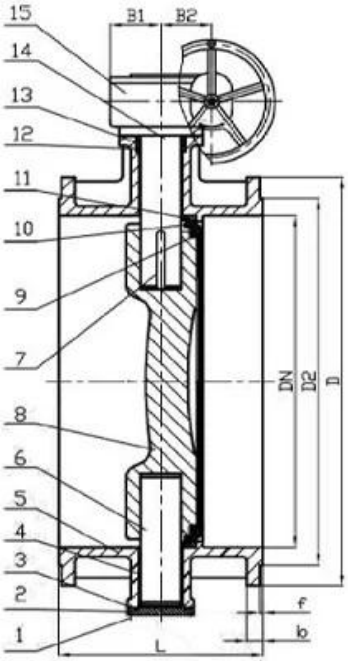

APPLICATION SCENARIO

Industrial water application | Power plant | Sea water desalination | Water treatment | Water supply and drainage | HAVC | Food and drug | Water transport

COMPANY FACTORY

COMPANY INFORMATION

i[illegible]: [illegible]

ii[illegible] CNC [illegible], [illegible], [illegible], [illegible]

unit [illegible]

iv[illegible]

v[illegible]: GB, [illegible], [illegible], TUV CE, ISO 9001, ADWO-2000, TS, PED, WRC WRAS, KTW, API 6D, API609

VI [illegible]: [illegible], [illegible], [illegible], [illegible], [illegible], [illegible], [illegible] / [illegible] / [illegible], [illegible]

01 21 years of professional experience

02 4 factories

03 Independent research and development team
28 top senior professional researchers

04 2 professional testing centers

05 100% high level ex-factory inspection

06 High quality imported materials

07 2 years quality assurance, repair and replacement

COMPANY QUALIFICATION

COMPANY EXHIBITION

□□□□□□□□□□□□□□□□□□□□□:

□□□: □□?
□□□: □□

□□□: □□□?
□□□: □□□□□□□□□□, □□□□□□, hrdraulic, □□□□□□□□□□□□□□□□□□□□□ RKSfluid Actuators □□□□□□□□□□□□□□□□□□□□□□□□□□□□□□□□□□□ □□

□□□: □□□?
□□□: RKSfluid □□

□□□: □□□□□□□□□□□□□□□□□□□
□□□: □□□□□□□□□□□□□□□□□□□□□□□□□□□□□□ 2 ~ 5 □□□□□□□□□□□□ □□

□□□: moq
A: 1pc □□□□□□□□□□□□□□□□□□□□□□□□□□□□□□□

□□□: □□□?
□□□: □□□□□□□□□□□□□□□□□□□□ 100% □□□□□□□□□□□□□□□□□□□□□□□□□□□□□ 2 □□ □□□
□□□□□□□□□□□□□□□□□□□□□□□□□□
□□□□□□□□□□□□ TUV, API, WRAS, CE, □□□□□□□□□□□□□ ISO
□□□□□□□□□□□□□□□□□□□□□□□□□□□ DIN, ASME, BS EN, JIS, API, AWWA

□□□: □□?

□□□: RKSfluid □□□□□□□□□□□□□□□□□□□ 20 □□□□□□□□□□ R&D □□□□□□ 70 □□□□□□□□□□□□□□
□□