RKSfluid®
A key Valve in Flow Control
Butterfly Valve
Ball Valve
Gate Valve
Globe Valve
Check Valve
Pipe Fittings

PTFE Butterfly Valve

BSEN 1092, DIN 2501, ANSI, JIS, AS2129
Size:DN50~DN600
Body:Ductile Iron
Disc:Ductile Iron+PTFE
Seat: PTFE
Connection: Wafer, Lug, Flange

PTFE Butterfly Valve

BSEN 1092, DIN 2501, ANSI, JIS, AS2129
Size: DN50~DN600
Body: Ductile Iron
Disc: Ductile Iron+PTFE
Seat: PTFE
Connection: Wafer, Lug, Flange

PTFE Butterfly Valve

BSEN 1092, DIN 2501, ANSI, JIS, AS2129
Size: DN50~DN600
Body: WCB, CF8, CF8M
Disc: CF8+PTFE, CF8M+PTFE
Seat: PTFE
Connection: Wafer, Lug

PTFE Butterfly Valve

BSEN 1092, DIN 2501, ANSI, JIS, AS2129
Size: DN50~DN600
Body: WCB, CF8, CF8M
Disc: CF8+PTFE, CF8M+PTFE
Seat: PTFE
Connection: Wafer, Lug

PTFE Butterfly Valve

BSEN 1092, DIN 2501, ANSI, JIS, AS2129
Size: DN50~DN600
Body: Ductile Iron
Disc: CF8 , CF8M
Seat: PTFE
Connection: Wafer, Lug, Flange

PTFE Butterfly Valve

BSEN 1092, DIN 2501, ANSI, JIS, AS2129
Size: DN50~DN600
Body: WCB
Disc: CF8 +PTFE, CF8 +PFA
Seat: PTFE
Connection: Wafer, Lug, Flange

Resilient seat butterfly valve

PN10/PN16, ANSI 125LB/150LB,5K/10K
Size:DN25-DN2400
Body:DI CI
Disc: Stainless steel
Seat :EPDM, NBR, Viton
Connection: Wafer, Lug, Flange

Resilient seat butterfly valve

PN10/PN16, ANSI 125LB/150LB,5K/10K
Size:DN25-DN2400
Body:DI CI
Disc: DI+ Nylon
Seat :EPDM, NBR, Viton
Connection: Wafer, Lug, Flange

Resilient seat butterfly valve

PN10/PN16, ANSI 125LB/150LB,5K/10K
Size:DN25-DN2400
Body:DI CI
Disc: Stainless steel
Seat :EPDM, NBR, Viton
Connection: Wafer, Lug, Flange

Resilient seat butterfly valve

PN10/PN16, ANSI 125LB/150LB,5K/10K
Size:DN25-DN2400
Body:DI CI
Disc: Stainless steel
Seat :EPDM, NBR, Viton
Connection: Wafer, Lug, Flange

Double flange resilient seat butterfly valve

PN10/PN16, ANSI 125LB/150LB, 5K/10K
Size:DN50-DN1000
Body:DI CI
Disc: Stainless steel
Seat :EPDM, NBR, Viton
Connection: Flange

Short-neck butterfly valve for petroleum

ANSI 125LB/150LB
Top Flange Standard:ISO5211
Size:2"-12"
Body: DI CI
Disc :Stainless Steel
Seat : EPDM, NBR, Viton
Connection:Wafer, Lug

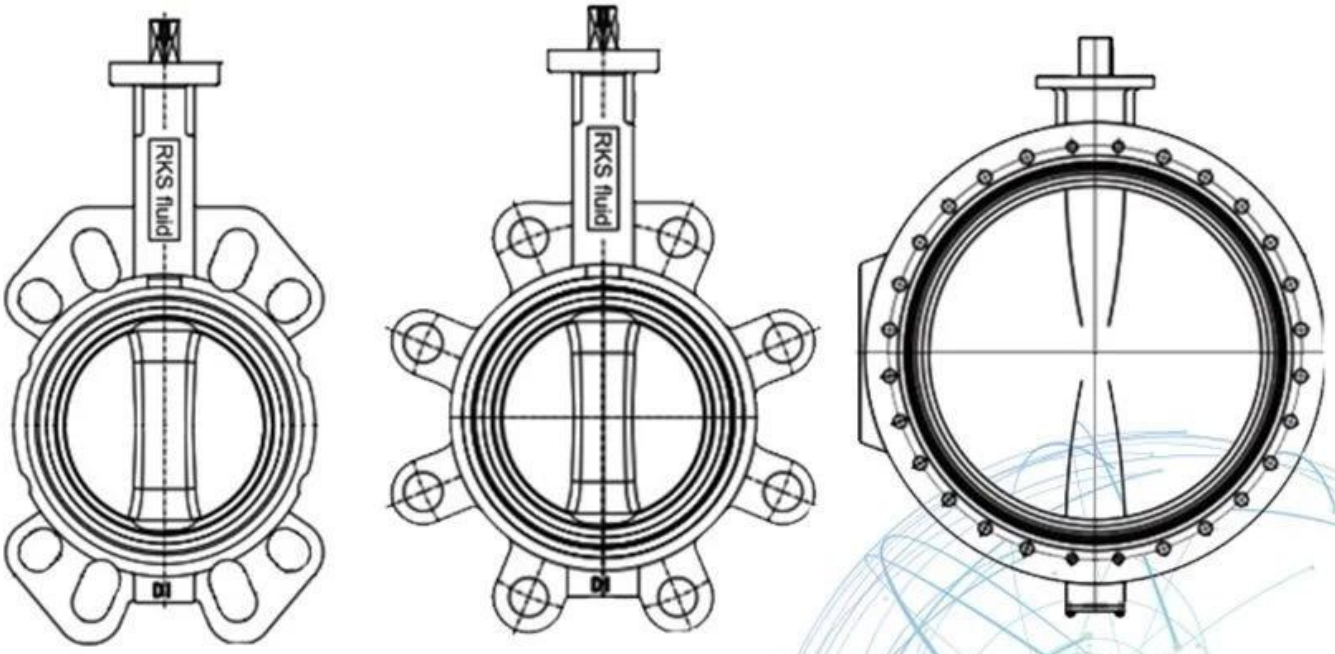

Application Scenario

Our Factory

Company Advantages

01 21 years of professional experience

02 4 factories

03 Independent research and development team
28 top senior professional researchers

04 2 professional testing centers

05 100% high level ex-factory inspection

06 High quality imported materials

07 2 years quality assurance, repair and replacement

RKSfluid [illegible] 1997 [illegible]
[illegible]
[illegible]
[illegible]
[illegible] [illegible]
[illegible] [illegible]
[illegible]
[illegible] GB [illegible]
[illegible] [illegible]
[illegible]
RKS
[illegible], [illegible], [illegible] [illegible] US Agent [illegible]
[illegible]
[illegible]: GB, ISO, [illegible] TUV [illegible] CE [illegible] ADWO-2000,
ISO9001, TS, API [illegible]: [illegible], [illegible],
[illegible] [illegible], [illegible] [illegible]
[illegible]: [illegible], Bonnets, [illegible], [illegible], [illegible], [illegible], [illegible] [illegible],
[illegible] Saddles [illegible]
[illegible] "[illegible]
[illegible]" [illegible]
[illegible] [illegible]!

I[illegible]: [illegible]

II[illegible]
[illegible]

reference [illegible]
[illegible]

IV[illegible]

Standard [illegible]: GB, [illegible], [illegible], TUV CE, ISO 9001, ADWO-2000, TS, PED, WRC WRAS, KTW, API 6D, API609

VI [illegible]: [illegible], [illegible], [illegible], [illegible], [illegible], [illegible], [illegible] / [illegible] / [illegible], [illegible]

□□□□□□□□□□□□□□□□

□□□: □□□
□□□: □□

□□□: □□□□□□□□□□□□□□□□□□□□□□□□□□□□□□□□□□□□□□□
A: □□□□□□□□, □□□□□, Hrdraulic, □□□□□□□□□□□□□□□ □□□□□□□□□□□ RKSfluid □□□□□□□□□□□□□□□□
□□□□□□□□□□□□□□□□□□ □□□□□□□□□□□□□□□□□□□□□□□□□□□□□

Q: □□□□□□□□□□□□□□□□□□□□□□□□□□□□
A: RKSfluid □□

Q: □□□□□□□□□□□□□□□
A: □□□□□□□□□□□□□□□□□□□□□□□ 2 ~ 5 □□□□□□□□□□ □□□□□□□□□□□□□□□□□□□□□□□□□□□□□□□□□□□□□

Q: □□□□□□□□
A: 1 □□□□□□□□□□□□□□□□□□□□□□□□□□□□□

□□□: □□□□□□□□□□□□□□□□□□□□□□□□□□□□□□□□□
A: 100% □□□□□□□□□□□□□□□□□□□□□□□□□□□□□□□□ 2 □□ □□□□□□□□□□□□□□□□□□□□□□□□□□□□□□□□□□□□□
□□□□□□

□□□□□□□□□□ TUV, API, WRAS, CE, ISO □□□□□□

[illegible] DIN, ASME, BS EN, JIS, API, AWWA

[illegible]: [illegible]

A: RKSfluid [illegible] 20 [illegible] R&D [illegible] 70 [illegible]

[illegible]