RKSfluid®

RKSfluid®

RKSfluid®

RKSfluid®

RKSfluid®

DESIGN FEATURES

DURABLE

- No-pin connection, 1 pc blow-out proof stem
- DI/CI Nodularity over 95%

ANTI-CORROSION

- Material: Epoxy powder: AkzoNobel, Earth Best!
- Coating Thickness: 200-250μm
- Spraying temp: over 200℃. Doesn't fade, even wipe with diethyl ether

QUALITY STANDARD

- 100% quality test, follow DIN, ASTM, JIS, GB/T, ISO, BS EN, API
- ONLY ONE Manufacturer get CE certification up to DN1800
- 2 years warranty. 15000 times On-off test, 30000 times Destructive experiment

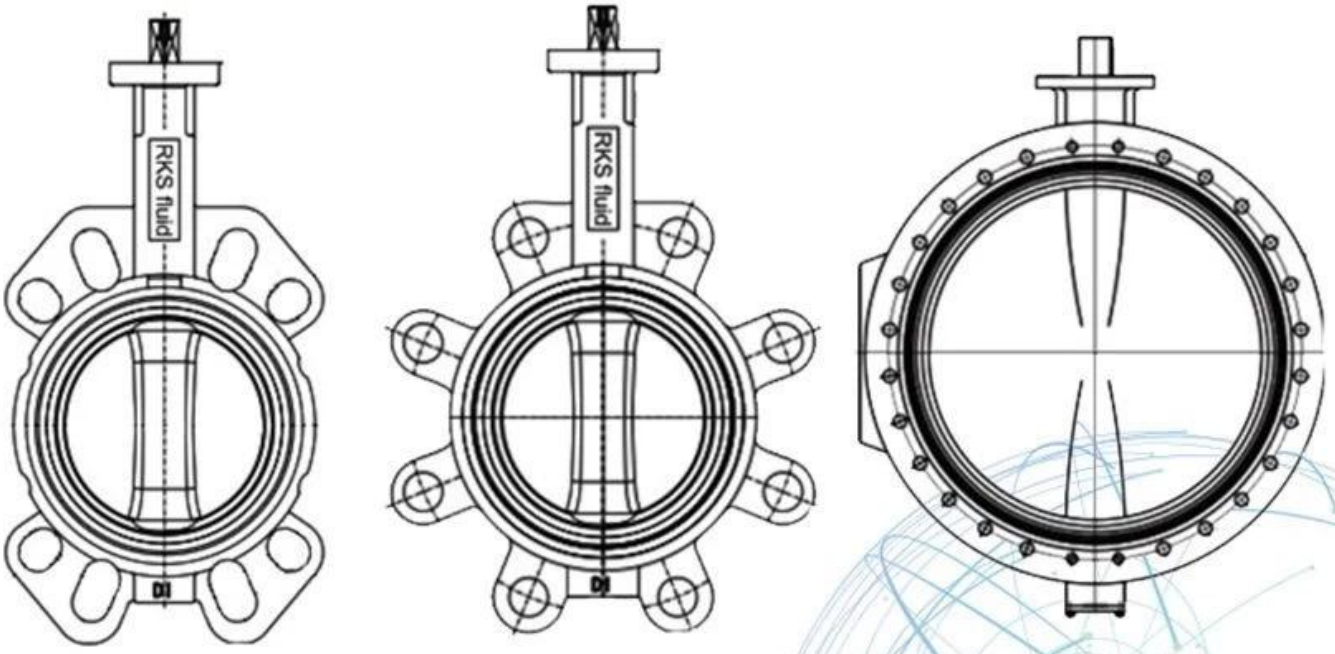

Application Scenario

RKSfluid □□□□□□□□□□□□□□□ 1997 □□□□□□□□□□□□□□□□□□□□□□□□□□□□□□□□□□□□□□
□□□□□□□

□□□ □□□□□□□
□□□
□□□□□□□□□□□□□□□□□□□□□□□□□□□□□□

□□ □□□□□□□□□□□□□□□□□□□□□□□□
□□□□□□

□□□□□□□□□□□□□□□□ □□□
□□□□□□□□□□□□□□□

□□□□□□□□□□□□□□□□□□□□□□ GB □□□□□□□□□□□□□□□□□□□□□□□□□□□□□□□□□□□□□□□
□□□□

□□□ □□□□□□□□□□□□□□□□□□□□
□□□□

□□
□□□□□□□□□□□□□□ RKS

□□□□□□□□□□□□□□□□□□□□□□□□□, □□□□□□□, □□□□□□□ □□□□□ US Agent □□□□□□□□□
□□□□□□□□□□□□□□□□□□□□□

□□: GB, ISO, □□□ TUV □□□□□□□
CE □□□ ADWO- 2000,

ISO9001, TS, API □□□□□□□□□□□□□□□□: □□□□□□, □□□□□□□□□□□□□□□□□□□□□□□□□□□□□
□□□□□,

□□□□□□□□□□□□□□□□□□□□□□□□□ □□□□□□□□□□□□, □□□□□□□□□□□□□□□□□□□□ □□□□□□□
□□□□□□□: □□□□□□□□□□□□, Bonnets, □□□□□□□□□, □□□□□□, □□□□□□□□□□□, □□□□□□□□
□□, □□□□□□□□□□□□□□,

□□□□□□ Saddles □□

[illegible]

[illegible] "[illegible]" [illegible]

[illegible] [illegible]!

area [illegible]: [illegible]

centers [illegible]

reference [illegible]

IV[illegible]

Standard [illegible]: GB, [illegible], [illegible], TUV CE, ISO 9001, ADWO-2000, TS, PED, WRC WRAS, KTW, API 6D,
API609

VI [illegible]: [illegible], [illegible], [illegible], [illegible], [illegible], [illegible], [illegible] / [illegible] / [illegible], [illegible]