RKSfluid

RKSfluid

RKSfluid
Proven Technology-Superior Feature-Legendary Valve

Air Release valve

Size range:DN25-DN300
Pressure ratings:PN10 PN16
Body:Ductile Iron
Trim:SS304 SS316 etc
Connection:ARVS/KARS-BPT threaded, KARX-Flanged
Working temperature: -10℃~+80℃

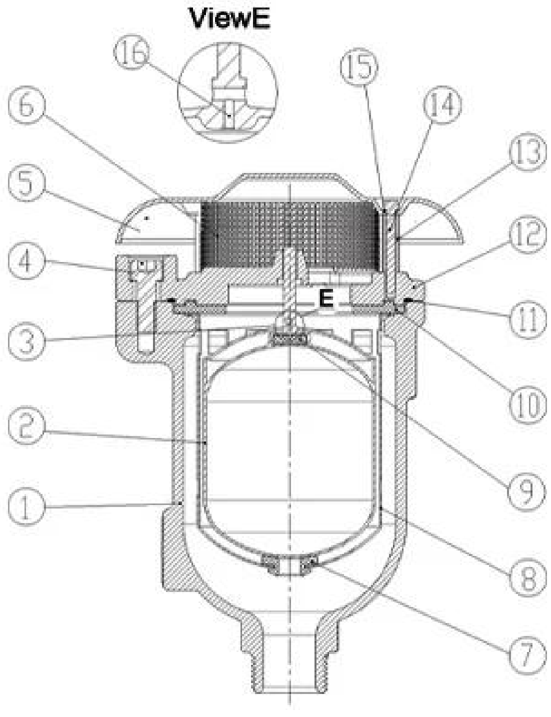

DN25-DN50

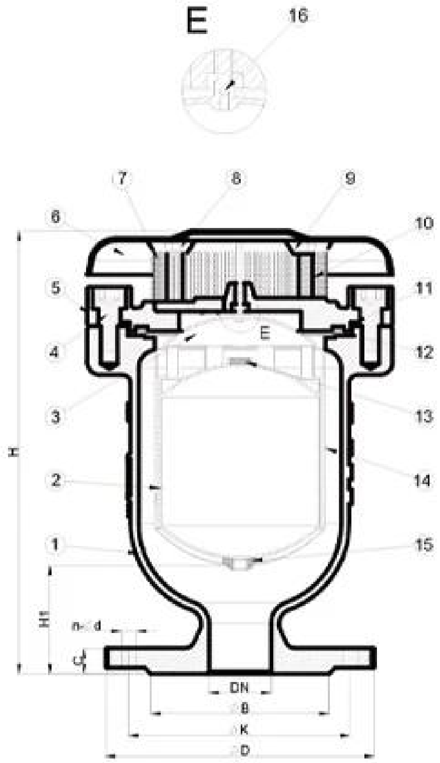

DN50-DN300

[illegible]:
1.[illegible]
[illegible]
2.[illegible]
[illegible] 3.[illegible]
[illegible] [illegible]
[illegible]
4.[illegible] [illegible] [illegible] [illegible]
[illegible] 5. [illegible] BS EN 1074-4

COMPANY INFORMATION

RKSfluid [illegible] [illegible].[illegible]. 2540 [illegible] [illegible] [illegible] [illegible] [illegible] [illegible] [illegible] [illegible] [illegible] [illegible] [illegible], [illegible] [illegible] [illegible] [illegible] [illegible] [illegible] [illegible] [illegible] GB [illegible] [illegible] [illegible] [illegible] [illegible] [illegible] RKS [illegible] [illegible] [illegible] [illegible]

[illegible] [illegible]: GB, ISO, [illegible], [illegible] TUV [illegible] CE [illegible] ADWO- 2000, ISO9001, TS, API

[illegible]: [illegible], [illegible], [illegible] [illegible], [illegible]

[illegible] [illegible]: [illegible], [illegible], [illegible], [illegible], [illegible], [illegible], [illegible], [illegible]

[illegible] [illegible] [illegible] "[illegible] [illegible] [illegible]" [illegible] [illegible]

□□!

COMPANY FACTORY

I □□□□□□□□□□□: □□□□□□□□□□□□□□□□□□□□□□□□ □□□□□□□□□ □□□□□□□□□□□□□□□□□□□□□□□□□□□□□□□□□□□□□

Ⅱ □□□ □□□□□□□□□□□□□□□□□□□□□□□□□□□□□□□□ □□□□□□□□□□□□□□□□□□□□□□□□□□□□□□□□□□□□ □□□□□□□□□□□□□□□□□

Ⅲ[illegible]

Ⅳ [illegible] [illegible] [illegible]

V [illegible]: GB, [illegible], [illegible], TUV CE, ISO 9001, ADWO-2000, TS, PED, WRC WRAS, KTW, API 6D, API609

VI [illegible]: [illegible], [illegible], [illegible], [illegible], [illegible], [illegible], [illegible] / [illegible] / [illegible], [illegible]

COMPANY QUALIFICATION

COMPANY EXHIBITION

□□□□□□□□□□□□□□□□:

□□□: □□□□□□□□□□□□□□□□□□□□□□□□□□□□□□ □□□□□□□□□□□□□□□□□□□□□□□□□□□□□□□□

□□□: □□□□□□□□□□□□□□□□ □□□□□□□□□□ □□□□□□□□□ □□□□□□□□□ □□□□□□□□□□□□□□□□□□

□□□: □□ □□□□□□□□□□□□□□□□□□?

□□□: □□□□□□□□□□, □□□□□□, Hrdraulic, □□□□□□□□□□□□□□□□□□ RKSfluid □□ □□□□□□□□□□□□□□□□□□□□□□□□□□□□□□□□□□□□□□

□□□: □□?

[illegible]: RKSfluid [illegible]

[illegible]: [illegible]

[illegible]: [illegible] 2 ~ 5 [illegible] [illegible]

[illegible]: [illegible]

[illegible]: 1 [illegible]

[illegible]: [illegible]?

A: [illegible] 100% [illegible] [illegible] 2 [illegible]

[illegible]

[illegible] TUV, API, WRAS, CE, ISO

[illegible] DIN, ASME, BS EN, JIS, API, AWWA

[illegible]: [illegible]?

A: RKSfluid [illegible] 20 [illegible] R&D [illegible] 70 [illegible]

[illegible] [illegible]