DESIGN FEATURES

DURABLE

- No-pin connection,1 pc blow-out proof stem
- DI/CI Nodularity over 95%

ANTI-CORROSION

- Material: Epoxy powder: AkzoNobel Earth Best!
- Coating Thickness:200-250μm
- Spraying temp: over 200°C. Doesn't fade, even wipe with diethyl ether

QUALITY STANDARD

- 100% quality test, follow DIN, ASTM, JIS, GB/T, ISO, BS EN, API
- ONLY ONE Manufacturer get CE certification up to DN1800
- 2 years warranty.15000 times On-off test,30000 times Destructive experiment

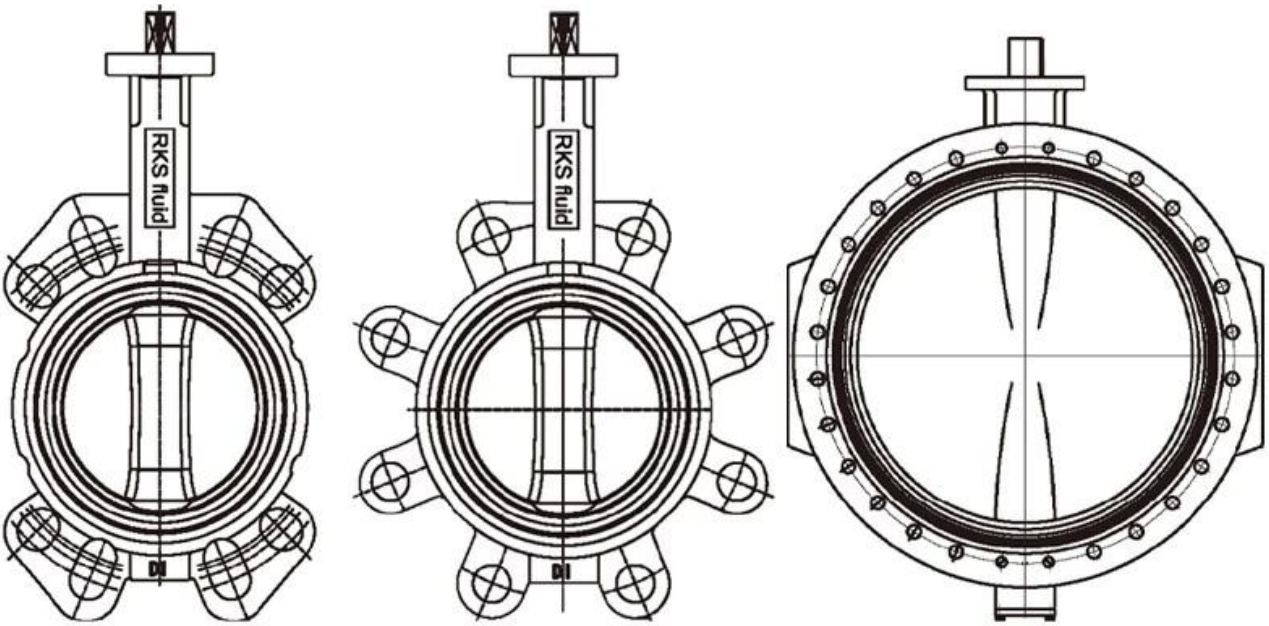

APPLICATION SCENARIO

Industrial water application | Power plant | Sea water desalination | Water treatment | Water supply and drainage | HAVC | Food and drug | Water transport

COMPANY FACTORY

COMPANY INFORMATION

i□□□□□□□□□□□□□□□: □□□

ii□□□□□□□□□□□□□□□□□□□□□□ CNC □□□□□□□□, □□□□□□□□□□□□□□□□□□□□□□□□□□□, □□□□□□□□□□□□□□□□□□□□□□□□□□□□□,
□□□□□□□□□□□□□□□□□□□□□□□□□□□□□□□□□□□□□□□

unit □□□
□□□□□□□□□□□□

iv□□

v□□□□□□□□□□□□□□□□□□: GB, □□□□□□□□□□□□□□□□, □□□□□□□□□□□□□□□□□□, TUV CE, ISO 9001,
ADWO-2000, TS, PED, WRC WRAS, KTW, API 6D, API609

VI □□□□□□□□□□□□□: □□□□□□□□□□□□□□, □□□□□□□□□, □□□□□□□□□□□□, □□□□□□□□□□□□□□□, □□□□□□□□□□□□□□,
□□□□□□□□□□□□, □□□□□□ / □□□□□□□□□ / □□□□□□□□□□□□□□□□□□□□, □□□□□□□□□□□□□□□

01 21 years of professional experience

02 4 factories

03 Independent research and development team
28 top senior professional researchers

04 2 professional testing centers

05 100% high level ex-factory inspection

06 High quality imported materials

07 2 years quality assurance, repair and replacement

COMPANY QUALIFICATION

COMPANY EXHIBITION

□□□□□□□□□□□□□□□□□□□□□□:

□□□: □□□?
□□□: □□

□□□: □□□?
□□□: □□□□□□□□□, □□□□□□, hrdraulic, □□□□□□□□□□□□□□□□□□□□ RKSfluid Actuators □□□□□□□□□□□□□□□□□□□□□□□□□□□□□□ □□□□□□□□□ □□□□□□□□□□□□□□□□□□□□□□□□□□□□□□□□□□□□□□

□□□: □□□?
□□□: RKSfluid □□

□□□: □□□□□□□□□□□□□□□□□□□□
□□□: □□□□□□□□□□□□□□□□□□□□□□□□□□□□□□□□ 2 ~ 5 □□□□□□□□□□□□ □□□

□□□: moq
A: 1pc □□□□□□□□□□□□□□□□□□□□□□□□□□□□□□□□

□□□: □□□□□□□□□□□□□□□□□□□□□□□□□□□□□□□□□□□□□□□?
□□□: □□□□□□□□□□□□□□□□□□□□ 100% □□□□□□□□□□□□□□□□□□□□□□□□□□□□□□□□□ 2 □□ □□□
□□□□□□□□□□□ TUV, API, WRAS, CE, □□□□□□□□□□□□ ISO
□□□□□□□□□□□□□□□□□□□□□□□□□ DIN, ASME, BS EN, JIS, API, AWWA

□□□: □□?

□□□: RKSfluid □□□□□□□□□□□□□□□□□□□□□ 20 □□□□□□□□□□□ R&D □□□□□□□ 70 □□□□□□□□□□□□□□□□
□□