DESIGN FEATURES

TECHNICAL REQUIREMENT

1.Design standard:BS 5163.
2.Face to face:BS 5163.
3.Flanges standard:BS EN1092-2:1997 PN16.
4.Test standard:BS EN12266-1 Rate B.

FEATURES

- Double flange metal seated gate valve
- Size Range:DN50-DN2000
- Standard-ISO/BS/DIN/AWWA/API
- Tests Standard-BS EN 12266-1
- Body Ring-Bronze/SS420/SS304/SS316
- Body-Ductile Iron /Cast Iron/Stainless Steel /WCB
- Fusion bonded epoxy coating-min 300 microns

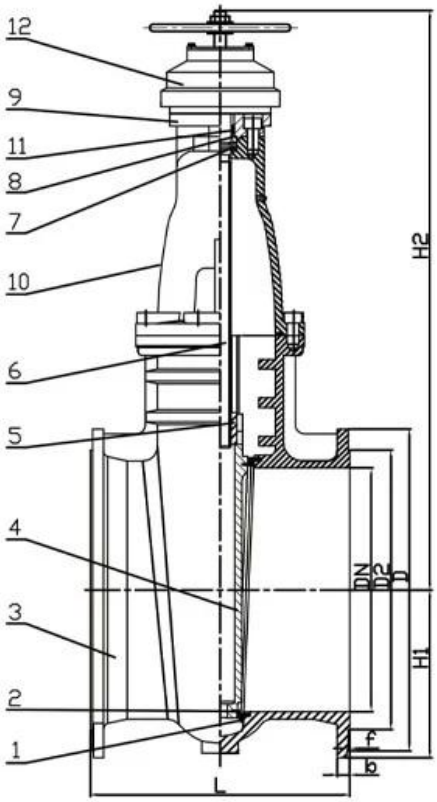

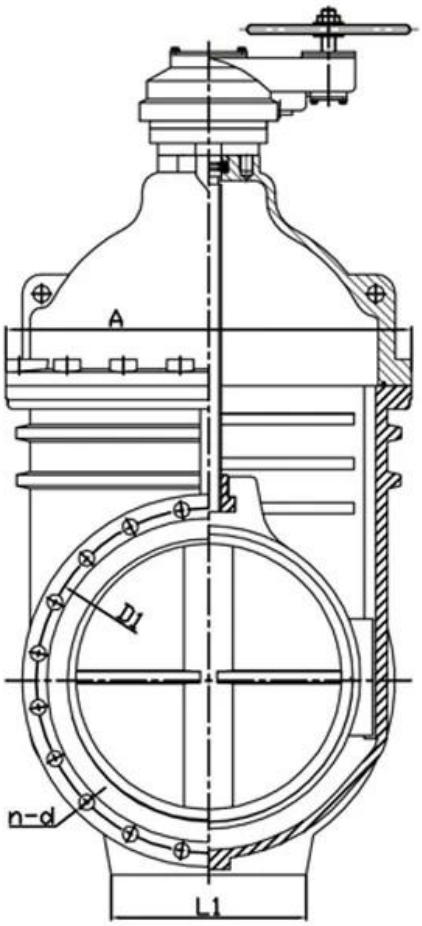

RELATED PRODUCTS

SMALL DIAMETER GATE VALVE
DN50-DN300,PN10/16/25

METAL SEATED GATE VALVE
DN350-DN600,PN10/16/25

LARGE DIAMETER
METAL SEATED GATE VALVE
DN700-DN2000,PN10/16/25

APPLICATION SCENARIO

Industrial water application | Power plant | Sea water desalination | Water treatment | Water supply and drainage | HAVC | Food and drug | Water transport

COMPANY FACTORY

COMPANY INFORMATION

i[illegible]: [illegible]

ii[illegible] CNC [illegible], [illegible], [illegible],
[illegible]

unit [illegible]
[illegible]

iv[illegible]

v[illegible]: GB, [illegible], [illegible], TUV CE, ISO 9001,
ADWO-2000, TS, PED, WRC WRAS, KTW, API 6D, API609

VI [illegible]: [illegible], [illegible], [illegible], [illegible], [illegible],
[illegible], [illegible] / [illegible] / [illegible], [illegible]

01
21 years of professional experience
02
4 factories
03
Independent research and development team
28 top senior professional researchers
04
2 professional testing centers
05
100% high level ex-factory inspection
06
High quality imported materials
07
2 years quality assurance, repair and replacement

COMPANY QUALIFICATION

COMPANY EXHIBITION

□□□□□□□□□□□□□□□□□□

□□□: □□?
□□□: □□

□□□: □□□□□□□□□□□□□□□□□□□□□□□□□□□□□□□□□□□?
□□□: □□□□□□□□□, □□□□□□, hrdraulic, □□□□□□□□□□□□□□□□□ RKSfluid Actuators □□□□□□□□□□□□□□□□□□□□□□□□□□□□□□ □□□□□□□□□□□□□□□□□□□□□□□□□□□□

□□□: □□□□□□□□□□□□□□□□□□□□□□□□□□□□□□□□□□□?
□□□: RKSfluid □□□

□□□: □□□□□□□□□□□□□□□□□
□□□: □□□□□□□□□□□□□□□□□□□□□□ 2 ~ 5 □□□□□□□□□□ □□□□□□□□□□□□□□□□□□□□□□□□□□□□□□□□□□□□□

□□□: moq
A: 1pc □□□□□□□□□□□□□□□□□□□□□□□□□

□□□: □□□□□□□□□□□□□□□□□□□□□□□□□□□□□?
□□□: □□□□□□□□□□□□□□□ 100% □□□□□□□□□□□□□□□□□□□□□□□□ 2 □□ □□□□□□□□□□□□□□□□□□□□□□□□□□□□□□□ □□□□□□□□□□□□□□□□□□□
□□□□□□□□□ TUV, API, WRAS, CE, □□□□□□□□□ ISO
□□□□□□□□□□□□□□□□□□ DIN, ASME, BS EN, JIS, API, AWWA

□□□: □□□?

[illegible]: RKSfluid [illegible] 20 [illegible] R&D [illegible] 70 [illegible]
[illegible]