DESIGN FEATURES

- **Elastic** stainless steel sealing ring, **"0" leakage**
- **Fireproof** structural design, **blow-out proof** stems
- **Auto** welding **plasma powder** surfacing valve seat
- **Hollow** design, **reduces** flow resistance
- Interchangeable **DSS entity seal / multiple-piece stainless and graphite seal**
- **ISO5211** Mounting platform, simple connection

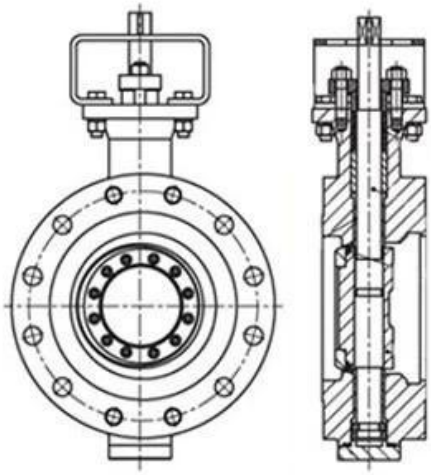

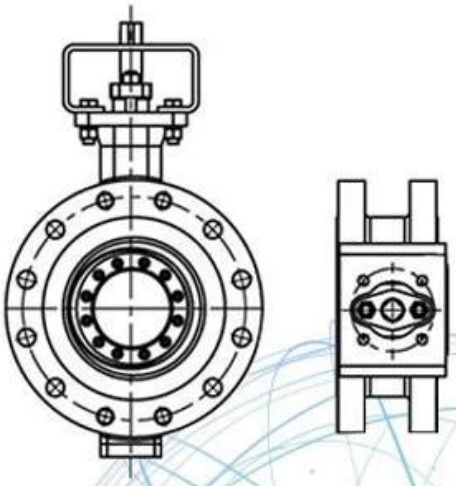

Application Scenario

Our Factory

i□□□□□□□□□□□□□□: □□

ii□□□□□□□□□□□□□□□□□□□□ CNC □□□□□□□, □□□□□□□□□□□□□□□□□□□□□□□□□, □□□□□□□□□□□□□□□□□□□□□□□□□□□, □□□□□□□□□□□□□□□□□□□□□□□□□□□□□□□□□□□

unit □□□

iv□□□

v□□□□□□□□□□□□□□□□□: GB, □□□□□□□□□□□□□□□, □□□□□□□□□□□□□□□□, TUV CE, ISO 9001, ADWO-2000, TS, PED, WRC WRAS, KTW, API 6D, API609

VI □□□□□□□□□□□: □□□□□□□□□□□□□, □□□□□□□□□, □□□□□□□□□□□, □□□□□□□□□□□□□, □□□□□□□□□□□□, □□□□□□□□□□□, □□□□□□ / □□□□□□□□ / □□□□□□□□□□□□□□□□□□□, □□□□□□□□□□□□□□

Exhibition Photos

□□□□□□□□□□□□□□□□

□□□: □□?
□□□: □□

□□□: □□□?
□□□: □□□□□□□□□□, □□□□□□, hrdraulic, □□□□□□□□□□□□□□□□□ RKSfluid Actuators □□□□□□□□□□□□□□□□□□□□□□□□□□□ □□

□□□: □□□?
□□□: RKSfluid □□

□□□: □□□□□□□□□□□□□□□□□
□□□: □□□□□□□□□□□□□□□□□□□□□□□□□□□ 2 ~ 5 □□□□□□□□□□□ □□□

□□□: moq
A: 1pc □□□□□□□□□□□□□□□□□□□□□□□□□□□□

□□□: □□□□□□□□□□□□□□□□□□□□□□□□□□□□□□□□□□□□?
□□□: □□□□□□□□□□□□□□□□□ 100% □□□□□□□□□□□□□□□□□□□□□□□□□□□ 2 □□ □□□□□□□□□□□□□□□□□□□□□□□□□□□□□□□□□□ □□□□□□□□□□□□□□□□□□□□□□
□□□□□□□□□□□ TUV, API, WRAS, CE, □□□□□□□□□□□ ISO
□□□□□□□□□□□□□□□□□□□□□ DIN, ASME, BS EN, JIS, API, AWWA

[illegible]: [illegible]?

[illegible]: RKSfluid [illegible] 20 [illegible] R&D [illegible] 70 [illegible]

[illegible]