DESIGN FEATURES

FEATURES

1. Fully Bore with seat diameter as DN+2 mm
2. Stable working even if the flow close to Zero
3. High performance and strength Nylon enforce diaphragm
4. One Million cycle test and 64 bar burst test

MAIN VALVE MATERIAL OPTION

- Ductile iron (DI): DN40-1200
- SUS304 (S3) or SUS316 (S6) or Duplex (SD) or Carbon Steel (CS) or Bronze (BR): DN40-400
- Aluminum (AL)：DN40-200

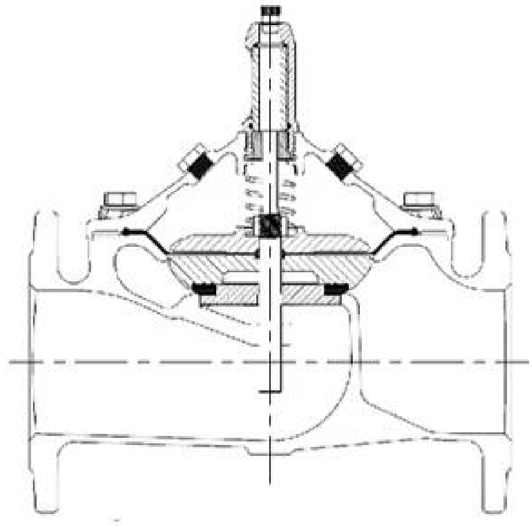

□□□□□□□□□□:

□□□
□□□
□□
- □□□□□□□□□□□□□□□□□□□ 10,00000 □□□

- □□□□□□□□□□□□□□□□□□□□□□□□□□□□□□ 5 □□□□
□□□□□□□□□□□□□□□□□□□□□□□□□□□□□□□□ CNC
□□ GSK & WIS
□□□□□□□□□□□□□□□□□□□□□□□□□□□□□
- □□□□□□□□□□□□□: □□□□□□□□□□ 0.5 □□□□
□□□□□□□□□□ 1.1xpn+1 □□□□
- □□□□□□□□□□□□□□□□: 1.5xpn+1 □□□□
- □□□□□□□□□□□□□□□□□□□□□□□□□□□□□□: +/- 0.2 □□□□
□□□□□□□□□□□□□□□□□□□□□□□□□□□□□□□ 1,000 □□□□□/□□
□□
□□□□□□□□□□□□□□□□□□□□□□□□□□□□□□□□□□□□ WRAS/KTW/NSF/FDA/ACS
□□□□□□□□□□□□□□□□□□□□□□□□□□□□□□□□□□□□

Size	DN40-DN1200
Working Medium	Water
Temperature	0°C~70°C
Material	Ductile Iron/Stainless Steel/Cast Steel/Bronze/Aluminum Alloy
Design Standards	CJ/T 219 & JB/T 10674 & EN 1074-5
Pressure Level	PN10, PN16, PN25
Stress Test Standard	GB/T 13927 & ISO 5208 &EN12266-1
Flange drilling standard	GB17241.6; EN1092-2; ISO7005-2; ANSI / JIS / AS2129
Structure Length	GB 12221 & EN558-1

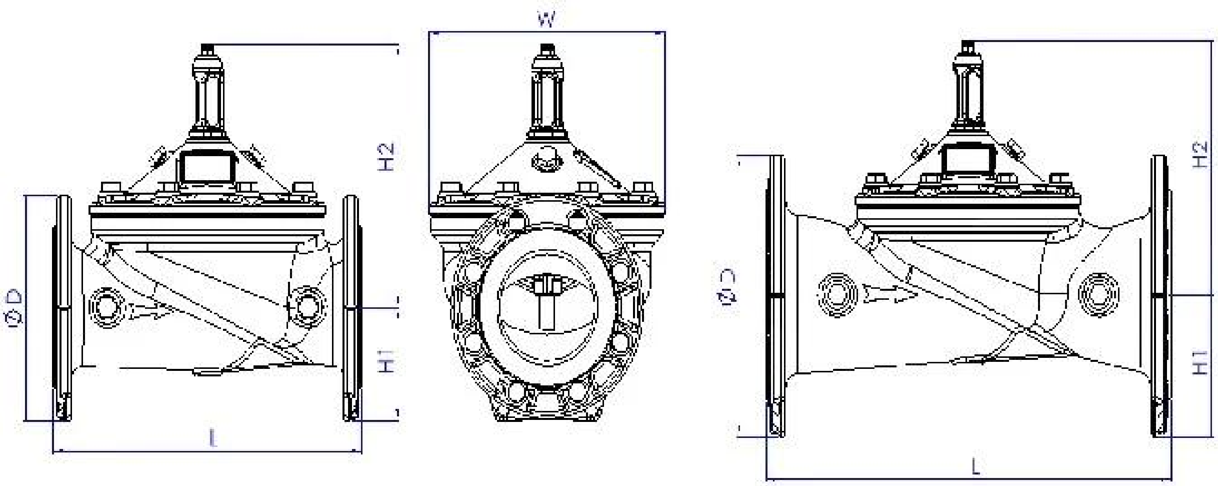

DN	L	H	H1	DN	L	H	H1
40	230	139	85	250	730	476	205
50	230	139	85	300	850	526	232
65	290	159	95	350	980	585	262
80	310	179	102	400	1100	624	292
100	350	214	112	500	1250	720	360
125	400	278	127	600	1450	835	425
150	480	333	145	800	1850	1110	515
200	600	407	172	1000	2250	1350	630

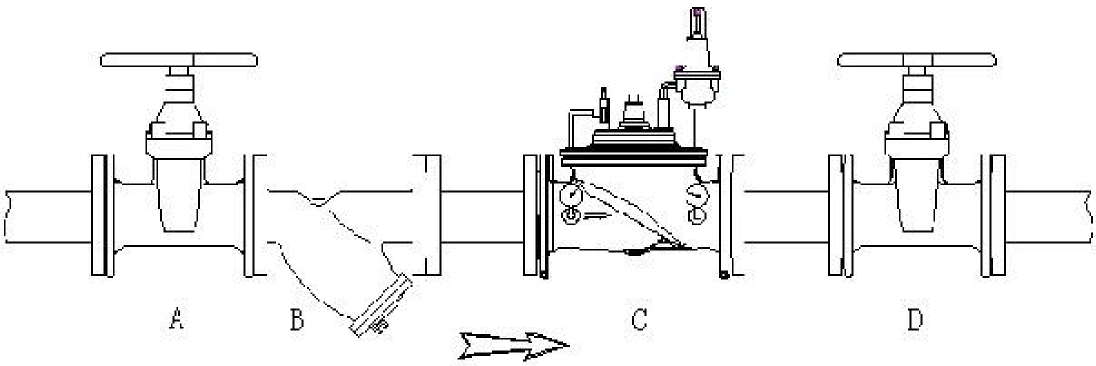

[illegible]

[illegible]

[illegible]

[illegible]

[illegible]

i□□□□□□□□□□□□□□□: □□

ii□□□□□□□□□□□□□□□□□□□□ CNC □□□□□□□□, □□□□□□□□□□□□□□□□□□□□□□□□□, □□□□□□□□□□□□□□□□□□□□□□□□, □□□□□□□□□□□□□□□□□□□□□□□□□□□□□□□□□□□□

unit □□ □□□□□□□□□□□

iv□□

v□□□□□□□□□□□□□□□□□□: GB, □□□□□□□□□□□□□□□□, □□□□□□□□□□□□□□□□□, TUV CE, ISO 9001, ADWO-2000, TS, PED, WRC WRAS, KTW, API 6D, API609

VI □□□□□□□□□□□□: □□□□□□□□□□□□□, □□□□□□□□□, □□□□□□□□□□□, □□□□□□□□□□□□□, □□□□□□□□□□□□, □□□□□□□□□□□, □□□□□□□ / □□□□□□□□□ / □□□□□□□□□□□□□□□□□□□, □□□□□□□□□□□□□□

Exhibition Photos

[illegible]

[illegible]: [illegible]?
[illegible]: [illegible]

[illegible]: [illegible]?
[illegible]: [illegible], [illegible], hrdraulic, [illegible] RKSfluid Actuators [illegible] [illegible]

[illegible]: [illegible]?
[illegible]: RKSfluid [illegible]

[illegible]: [illegible]
[illegible]: [illegible] 2 ~ 5 [illegible] [illegible]

[illegible]: moq
A: 1pc [illegible]

[illegible]: [illegible]?
[illegible]: [illegible] 100% [illegible] 2 [illegible] [illegible]

[illegible] TUV, API, WRAS, CE, [illegible] ISO
[illegible] DIN, ASME, BS EN, JIS, API, AWWA

[illegible]: [illegible]?
[illegible]: RKSfluid [illegible] 20 [illegible] R&D [illegible] 70 [illegible]
[illegible]