DESIGN FEATURES

TECHNICAL REQUIREMENT

1.Design standard:BS 5163.
2.Face to face:BS 5163.
3.Flanges standard:BS EN1092-2:1997 PN16.
4.Test standard:BS EN12266-1 Rate B.

FEATURES

- Double flange metal seated gate valve
- Size Range:DN50-DN2000
- Standard-ISO/BS/DIN/AWWA/API
- Tests Standard-BS EN 12266-1
- Body Ring-Bronze/SS420/SS304/SS316
- Body-Ductile Iron /Cast Iron/Stainless Steel /WCB
- Fusion bonded epoxy coating-min 300 microns

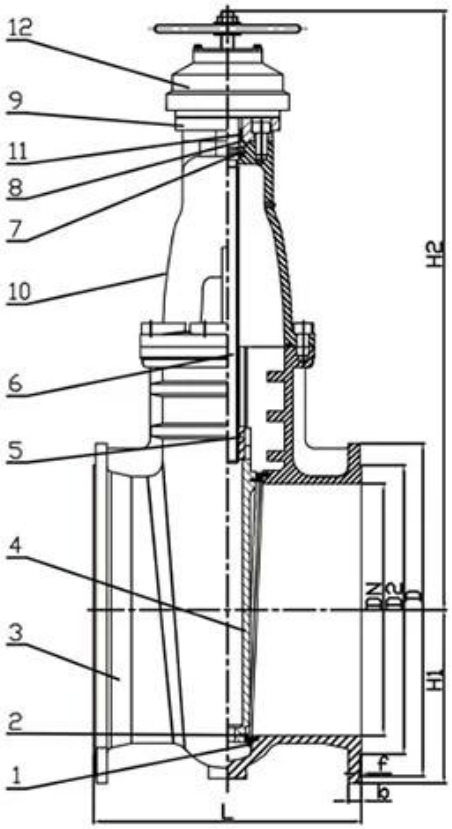

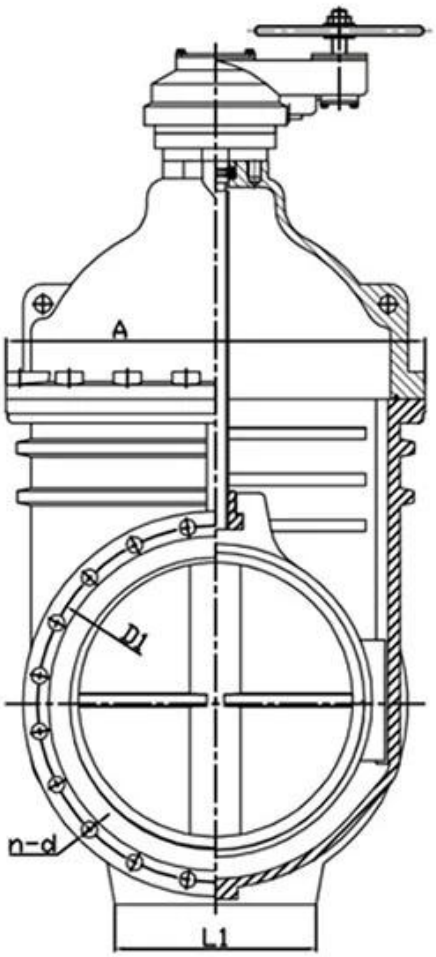

RELATED PRODUCTS

SMALL DIAMETER GATE VALVE
DN50-DN300,PN10/16/25

METAL SEATED GATE VALVE
DN350-DN600,PN10/16/25

LARGE DIAMETER
METAL SEATED GATE VALVE
DN700-DN2000,PN10/16/25

RKS Fluid □□□□□□□□□□□□□□□ 1997

□□□,

□□□□□□□□□□□□□□□□□□□□□□□□□□□□□, □□□□□□□□□□□□□□□□□□□□□□□□□□□,

□□ Liaoning □□□□□□□□□ GB

□□ RKS

□□□: GB, ISO, German □□□ American Standard □□□□□□□□□□□□□□□□□□□□□□□□ TUV □□□□□□ CE □□□ ADWO- 2000, ISO9001, TS, API□□□□□□□□□□□□□□□□: Manual, Valve Ball Ball Valves, Vutterfly Valves □□: □□□□□□□□□□□□, □□□□, □□□□□□□□□, □□□□□, □□□□□□□□□□□□, □□□□□□□□□□, □□□□□□□□□□□□□□□□□□□□,

□□

[illegible]

"[illegible]"[illegible]!

COMPANY INFORMATION

COMPANY QUALIFICATION

COMPANY EXHIBITION

□□□□□□□□□□□□□□□□:

□□□: □□□?
□□□: □□□

□□□: □□?
□□□: □□□□□□□□□, □□□□□□, hrdraulic, □□□□□□□□□□□□□□□□□□RKSfluid Actuators
□□

□□□: □□?
□□□: RKSfluid □□

□□□: □□□□□□□□□□□□□□□□□
□□□: □□□□□□□□□□□□□□□□□□□□□□□□□□□□ 2 ~ 5 □□

□□□: moq
A: 1pc □□□□□□□□□□□□□□□□□□□□□□□□□□□

□□□: □□□□□□□□□□□□□□□□□□□□□□□□□□□□□□□□□□□□□?
□□□: □□□□□□□□□□□□□□□□□□ 100% □□□□□□□□□□□□□□□□□□□□□□□□□□□□ 2
□□□
□□□□□□□□□□ TUV, API, WRAS, CE, □□□□□□□□□□□ ISO
□□□□□□□□□□□□□□□□□□□□□□□□ DIN, ASME, BS EN, JIS, API, AWWA

□□□: □□?
□□□: RKSfluid □□□□□□□□□□□□□□□□□□□□□□□□□□□□□□ 20 □□□□□□□□□□□□□□ R&D □□□□□□□□ 70
□□