RKSfluid®
A key Valve in Flow Control
Butterfly Valve
Ball Valve
Gate Valve
Globe Valve
Check Valve
Pipe Fittings

GLH44XT-6防潮阻逆式底阀（拍门）GLH44XT-6 Moistureproof anti-reverse bottom valve (paimen)

■ 概述

该阀一般用于城市污水或城市排水系统中，安装于城市污水或城市排水管道与江河道连接处，当江河水位上涨时，阀门自动关闭，防止河道里水进入城市内部，特别发洪水时，有利于城市抗洪救灾；当江河水位回落时，阀门自动开启，将城市处里后的污水或城市积水排出。

■ Overview

This valve is usually used in urban sewage or drainage system. Mounted at the joint between urban sewage or drainge pipeline and rivers, it will close automatically when the water level of river rises, thus to avoid river water entering urban area.Especially in case of flood,it is good for flood control. When water level declines,this valve will start automatically to discharge the worked sewage or deposited water in city.

■ 结构示意图及安装示意图(Structural Diagram & installation drawing)

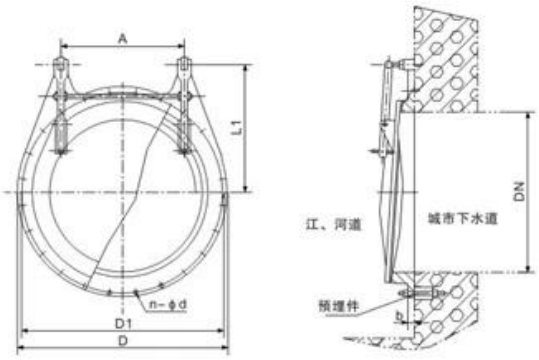

■ 主要零件材质(Main Parts and Materials)

名 称 Name	材 质 Material	备 注 Remarks
阀体ValveBody	HT200 / 25#	ASTM A126
阀瓣、摇杆 Disc, Rocker	FCD45 / 25#	ASTM A536 65-45-12
连接杆、插销 Connection pole;inserted pin	SUS304	/
阀体座封 Valve body seat seal	丁晴橡胶N.B.R. / Brass	/

■ 规格主要外型尺寸(Main external dimension)

标准口径DN(mm) Stand ard requirements	A	L1	D	D1	b	H	H1	n-φd
200	150	177.5	315	280	22			8-18
300	280	270	435	395	24			12-23
400	300	300	535	495	28			16-23
500	350	355	640	600	28			16-23
600	400	410	755	705	30			20-25
700	500	450	860	810	30			24-25
800	570	500	975	920	30			24-30
900	620	580	1075	1020	30			24-30
1000	690	650	1175	1120	32	164	420	28-30
1200	1000	990	1375	1320	35			32-30
1400	1200	1090	1575	1520	37			36-30
1500	1300	1200	1690	1630	38			36-30
1600	1450	1250	1785	1730	40			40-30
1800	1600	1410	1985	1930	42			44-30
2000			2185	2130	44			48-30
2200			2400	2340	48			52-34
2400			2600	2540	50			56-34

APPLICATION SCENARIO

I□□□□□□□□□□□□□□: □□

centers □□□

reference □□

IV□□□

Standard □□□□□□□□□□□□□□□□□: GB, □□□□□□□□□□□□□□□, □□□□□□□□□□□□□□□□□□, TUV CE, ISO 9001, ADWO-2000, TS, PED, WRC WRAS, KTW, API 6D, API609

VI □□□□□□□□□□□□: □□□□□□□□□□□□, □□□□□□□□□, □□□□□□□□□□□, □□□□□□□□□□□□, □□□□□□□□, □□□□□□□□□□, □□□□□□ / □□□□□□□□ / □□□□□□□□□□□□□□□□, □□□□□□□□□□□□□□

Our Factory

Company Advantages

01 21 years of professional experience

02 4 factories

03 Independent research and development team
28 top senior professional researchers

04 2 professional testing centers

05 100% high level ex-factory inspection

06 High quality imported materials

07 2 years quality assurance, repair and replacement

Exhibition Photos

□□□□□□□□□□□□□□□□

□□□: □□
□□□: □□

□□□: □□□
A: □□□□□□□□, □□□□□, Hrdraulic, □□□□□□□□□□□□□□ □□□□□□□□□□ RKSfluid □□□□□□□□□□□□□□□□
□□□□□□□□□□□□□□□□ □□□□□□□□□□□□□□□□□□□□□□□□□□□□

Q: □□□□□□□□□□□□□□□□□□□□□□□□□□□
A: RKSfluid □□

Q: □□□□□□□□□□□□□□□

A: [illegible] 2 ~ 5 [illegible] [illegible]

Q: [illegible]

A: 1 [illegible]

[illegible]: [illegible]

A: 100% [illegible] 2 [illegible] [illegible]

[illegible] TUV, API, WRAS, CE, ISO [illegible]

[illegible] DIN, ASME, BS EN, JIS, API, AWWA

[illegible]: [illegible]

A: RKSfluid [illegible] 20 [illegible] R&D [illegible] 70 [illegible]