DESIGN FEATURES

TECHNICAL REQUIREMENT

1.Design standard:BS 5163.
2.Face to face:BS 5163.
3.Flanges standard:BS EN1092-2:1997 PN16.
4.Test standard:BS EN12266-1 Rate B.

FEATURES

- Double flange metal seated gate valve
- Size Range:DN50-DN2000
- Standard-ISO/BS/DIN/AWWA/API
- Tests Standard-BS EN 12266-1
- Body Ring-Bronze/SS420/SS304/SS316
- Body-Ductile Iron /Cast Iron/Stainless Steel /WCB
- Fusion bonded epoxy coating-min 300 microns

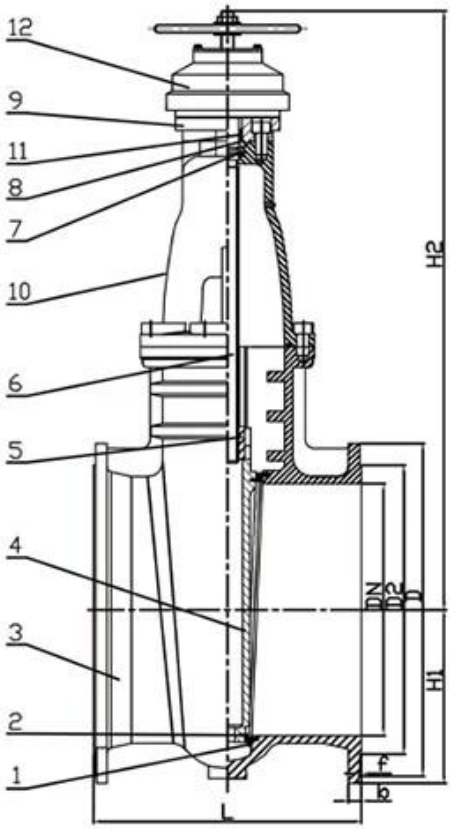

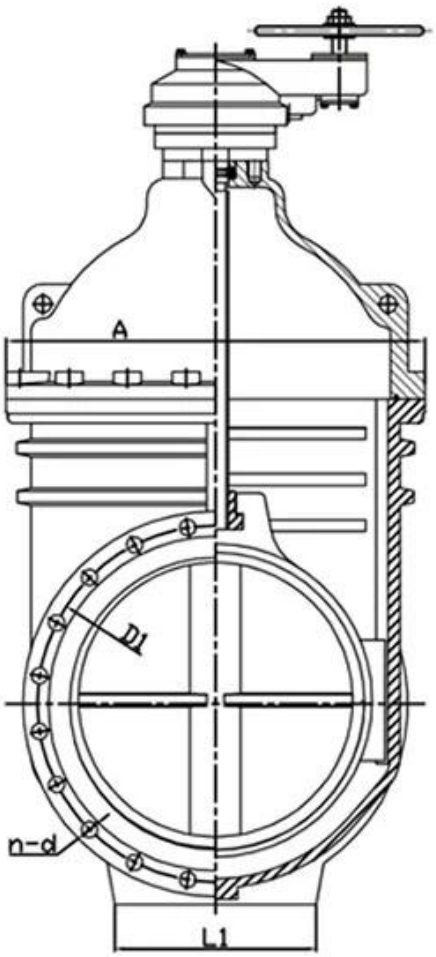

RELATED PRODUCTS

SMALL DIAMETER GATE VALVE
DN50-DN300,PN10/16/25

METAL SEATED GATE VALVE
DN350-DN600,PN10/16/25

LARGE DIAMETER
METAL SEATED GATE VALVE
DN700-DN2000,PN10/16/25

APPLICATION SCENARIO

Industrial water application | Power plant | Sea water desalination | Water treatment | Water supply and drainage | HAVC | Food and drug | Water transport

COMPANY FACTORY

COMPANY INFORMATION

RKS Fluid [illegible] 1997 [illegible] [illegible] [illegible], [illegible] [illegible], [illegible], [illegible] [illegible] [illegible] Liaoning [illegible] GB [illegible] [illegible] [illegible] [illegible] RKS [illegible] [illegible]: GB, ISO, German [illegible] American Standard [illegible] TUV [illegible] CE [illegible] ADWO- 2000, ISO9001, TS, API[illegible]: Manual, Valve Ball Ball Valves, Vutterfly Valves [illegible] [illegible]: [illegible], [illegible], [illegible], [illegible], [illegible], [illegible], [illegible], [illegible] [illegible] [illegible] "[illegible]"[illegible] [illegible] [illegible]!

01
21 years of professional experience
02
4 factories
03
Independent research and development team
28 top senior professional researchers
04
2 professional testing centers
05
100% high level ex-factory inspection
06
High quality imported materials
07
2 years quality assurance, repair and replacement

COMPANY QUALIFICATION

COMPANY EXHIBITION

□□□□□□□□□□□□□□□□:

□□□: □□?
□□□: □□

□□□: □□□□□□□□□□□□□□□□□□□□□□□□□□□□□□□□□□□□?
□□□: □□□□□□□□□, □□□□□□, hrdraulic, □□□□□□□□□□□□□□□RKSfluid Actuators □□□□□□□□□□□□□□□□□
□□

□□□: □□□□□□□□□□□□□□□□□□□□□□□□□□□□□□□□□□□?
□□□: RKSfluid □□□

□□□: □□□□□□□□□□□□□□□□
□□□: □□□□□□□□□□□□□□□□□□□□□□□□□ 2 ~ 5 □□

□□□: moq
A: 1pc □□□□□□□□□□□□□□□□□□□□□□

□□□: □□□□□□□□□□□□□□□□□□□□□□□□□□□□□?
□□□: □□□□□□□□□□□□□□□ 100% □□□□□□□□□□□□□□□□□□□□□ 2 □□□□□□□□□□□□□□□□□□□□□□□□□□□□
□□□□□□□□□□□□□□□□□
□□□□□□□□□ TUV, API, WRAS, CE, □□□□□□□□□ ISO
□□□□□□□□□□□□□□□□□ DIN, ASME, BS EN, JIS, API, AWWA

□□□: □□?

[illegible]: RKSfluid [illegible] 20 [illegible] R&D [illegible] 70 [illegible]
[illegible]