## Air Release valve

Size range:DN25-DN300
Pressure ratings:PN10 PN16
Body:Ductile Iron
Trim:SS304 SS316 etc
Connection:ARVS/KARS-BPT threaded, KARX-Flanged
Working temperature: -10°C~+80°C

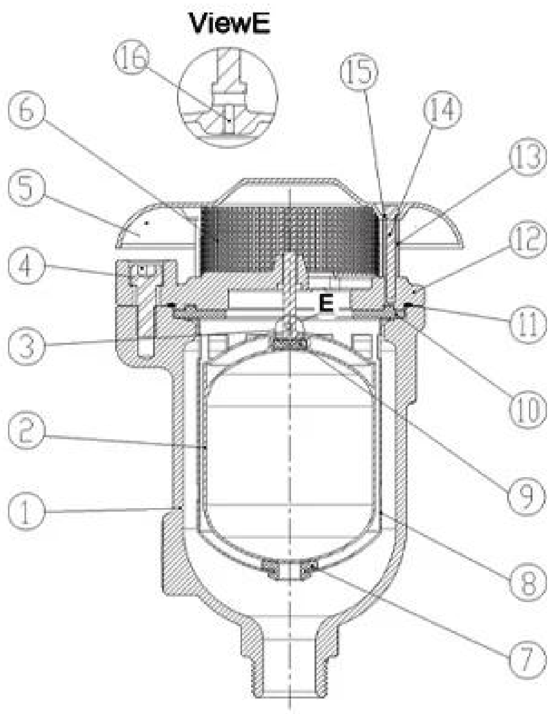


DN25-DN50

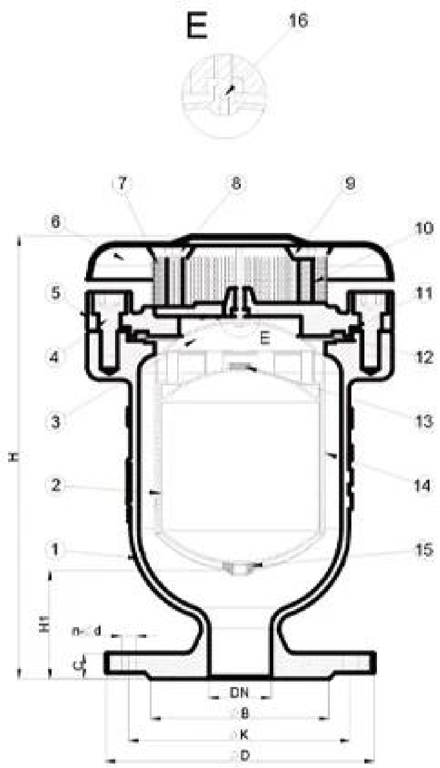


DN50-DN300

**[illegible]:**

1. [illegible] 2.

[illegible] 3.

[illegible] 4.

[illegible]

[illegible] 5.com [illegible] BS EN 1074-4

## COMPANY INFORMATION

RKSfluid [illegible] 1997

[illegible]

[illegible], [illegible],

[illegible],

[illegible]Liaoning Province [illegible] GB

[illegible]

RKS[illegible]

[illegible]Cover: GB, ISO, German [illegible] American Standard

[illegible] TUV [illegible] CE [illegible] ADWO- 2000ISO9001, TS, API

[illegible]: Manual, Valves Ball Ball Valves

[illegible]

[illegible]: [illegible], [illegible], [illegible], [illegible], [illegible], [illegible],

[illegible],[illegible]

[illegible]

"[illegible]"

[illegible]

[illegible]!

i[illegible]: [illegible]

ii[illegible], [illegible], [illegible],

[illegible]

unit [illegible]

iv[illegible]

v[illegible]: GB, [illegible], [illegible], TUV CE, ISO 9001, ADWO-2000, TS, PED, WRC WRAS, KTW, API 6D, API609

VI [illegible]: [illegible], [illegible], [illegible], [illegible], [illegible], [illegible], [illegible] / [illegible] / [illegible], [illegible]

## COMPANY QUALIFICATION

## COMPANY EXHIBITION

□□□□□□□□□□□□□□:

**□□□: □□□□□□□□□□□□□□□□□□□□□□□□□□□□□□□□□□□□□□□□□□□□?**

□□□: □□□□□□□□□□□□□□□□□□□□□□□□□□□□□□□□□□□□□□□□□□□□□□

**□□□: □□□□□□□□□□□□□□□□□□□□□□□□□□□□□□□□□?**

□□□: □□□□□□□□, □□□□□, hrdraulic, □□□□□□□□□□□□□□RKSfluid Actuators

□□□□□□□□□□□□□□□□□□□□□□□□□□□□□□□□□□□□□□□□□□□□□□□□□□□□□□□□

**□□□: □□□□□□□□□□□□□□□□□□□□□□□□□□□□□□□□□?**

□□□: RKSfluid □□□□□□□□□□□□□□□□□□□□□□□□□□□□□□□□□□□□□□□□□□□□□□□□□□□□

**□□□: □□□□□□□□□□□□□**

□□□: □□□□□□□□□□□□□□□□□□□□□□ 2 ~ 5 □□□□□□□□□□□□□□□□□□□□□□□□□□□□□□□□□□□□□□□□□□□

**□□□: moq**

A: 1pc □□□□□□□□□□□□□□□□□□□□□□

**□□□: □□□□□□□□□□□□□□□□□□□□□□□□□□□?**

□□□: □□□□□□□□□□□□□□ 100% □□□□□□□□□□□□□□□□□□□□□□ 2

□□□□□□□□□□□□□□□□□□□□□□□□□□□□□□□□□□□□□□□□□□□□□□□□

□□□□□□□□□ TUV, API, WRAS, CE, □□□□□□□□□ ISO

□□□□□□□□□□□□□□□□□□ DIN, ASME, BS EN, JIS, API, AWWA

**□□□: □□□□□□□□□□□□□□□□□□□□□□□□□□□□□□□□□□□□□□□□□□□□□□□□□□?**

□□□: RKSfluid □□□□□□□□□□□□□□□□□□□□□□ 20 □□□□□□□□□□□ R&D □□□□□□□ 70

□□□□□□□□□□□□□□□□□□□□□□□□□□□□□□□□□□□□□□□□□□□□□□□□□□□□□□□□□□□□□□□□□□□□□□□