DESIGN FEATURES

1.Elastic stainless steel sealing ring,"0"leakage

2.Fireproof structural design,blow-out proof stems

3.Auto welding plasma powder surfacing valve seat

4.Hollow design,reduces flow resistance

5.Interchangeable DSS entity seal / multiple-piece

6.stainless and graphite seal

7.ISO5211 Mounting platform,simple connection

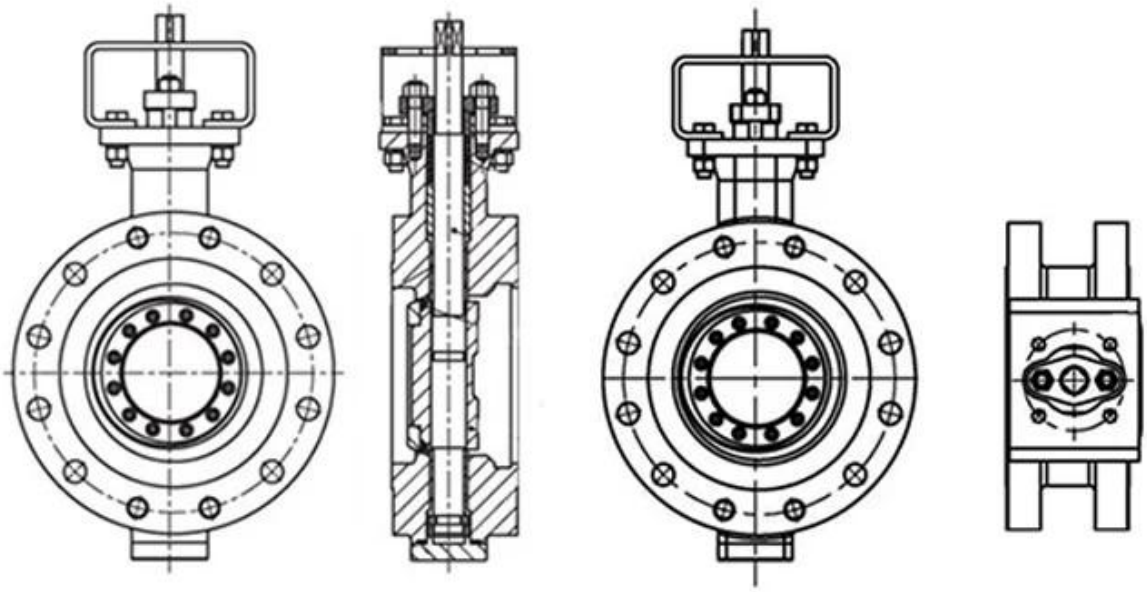

APPLICATION SCENARIO

Industrial water application | Power plant | Sea water desalination | Water treatment | Water supply and drainage | HAVC | Food and drug | Water transport

COMPANY INFORMATION

i[illegible]: [illegible]

ii[illegible] CNC [illegible], [illegible], [illegible],
[illegible]

unit [illegible]
[illegible]

iv[illegible]

v[illegible]: GB, [illegible], [illegible], TUV CE, ISO 9001,
ADWO-2000, TS, PED, WRC WRAS, KTW, API 6D, API609

VI [illegible]: [illegible], [illegible], [illegible], [illegible], [illegible],
[illegible], [illegible] / [illegible] / [illegible], [illegible]

COMPANY QUALIFICATION

COMPANY EXHIBITION

□□□□□□□□□□□□□□

□□□: □□□□□□□□□□□□□□□□□□□□□□□□□□□□□□□□□□□□□□□?
□□□: □□□

□□□: □□□□□□□□□□□□□□□□□□□□□□□□□□□□□?
□□□: □□□□□□□□, □□□□□, hrdraulic, □□□□□□□□□□□□□ RKSfluid Actuators □□□□□□□□□□□□□□□□□□
□□□□□□ □□□□□□□□□□□□□□□□□□□□□□□□

□□□: □□□□□□□□□□□□□□□□□□□□□□□□□□□□□?
□□□: RKSfluid □□

□□□: □□□□□□□□□□□□□
□□□: □□□□□□□□□□□□□□□□□□□□ 2 ~ 5 □□□□□□□□ □□□□□□□□□□□□□□□□□□□□□□□□□□□□□□□□

□□□: moq
A: 1pc □□□□□□□□□□□□□□□□□□□□□

□□□: □□□□□□□□□□□□□□□□□□□□□□□□?
□□□: □□□□□□□□□□□□□ 100% □□□□□□□□□□□□□□□□□□□□ 2 □□ □□□□□□□□□□□□□□□□□□□□□□□□□
□□□□□□□□□□□□□□□□
□□□□□□□□ TUV, API, WRAS, CE, □□□□□□□□ ISO
□□□□□□□□□□□□□□□□ DIN, ASME, BS EN, JIS, API, AWWA

□□□: □□□?
□□□: RKSfluid □□□□□□□□□□□□□□□□□□□ 20 □□□□□□□□□□ R&D □□□□□□ 70 □□□□□□□□□□□□□□□
□□□