RKSfluid®
A key Valve in Flow Control
Butterfly Valve
Ball Valve
Gate Valve
Globe Valve
Check Valve
Pipe Fittings

Introduction

Our Aluminum valve handwheel gearbox, 90 ° slewing drive device is suitable for butterfly valve, ball valve and plug valve and so on. The aluminum alloy material body after static electricity powder coating has an excellent appearance, strong adhesion/mechanical property and anti-corrosion/wear resistance.

Square: 8/ 9/ 11/ 14/ 17/ 19/ 22/ 27

ISO 5211 Flange Type: F05/ F07/ F09/ F10/ F12/ F14/ F16/ F25

Features

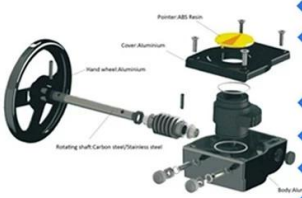

- ISO 5211 direct mount patterns.
- Filled with special lubricant before leaving the factory.
- Weatherproof is IP 65.
- The output torque range: 180-5500NM
- 5 degrees angle adjusting.
- All aluminum shell light and beautiful.

Application Scenario

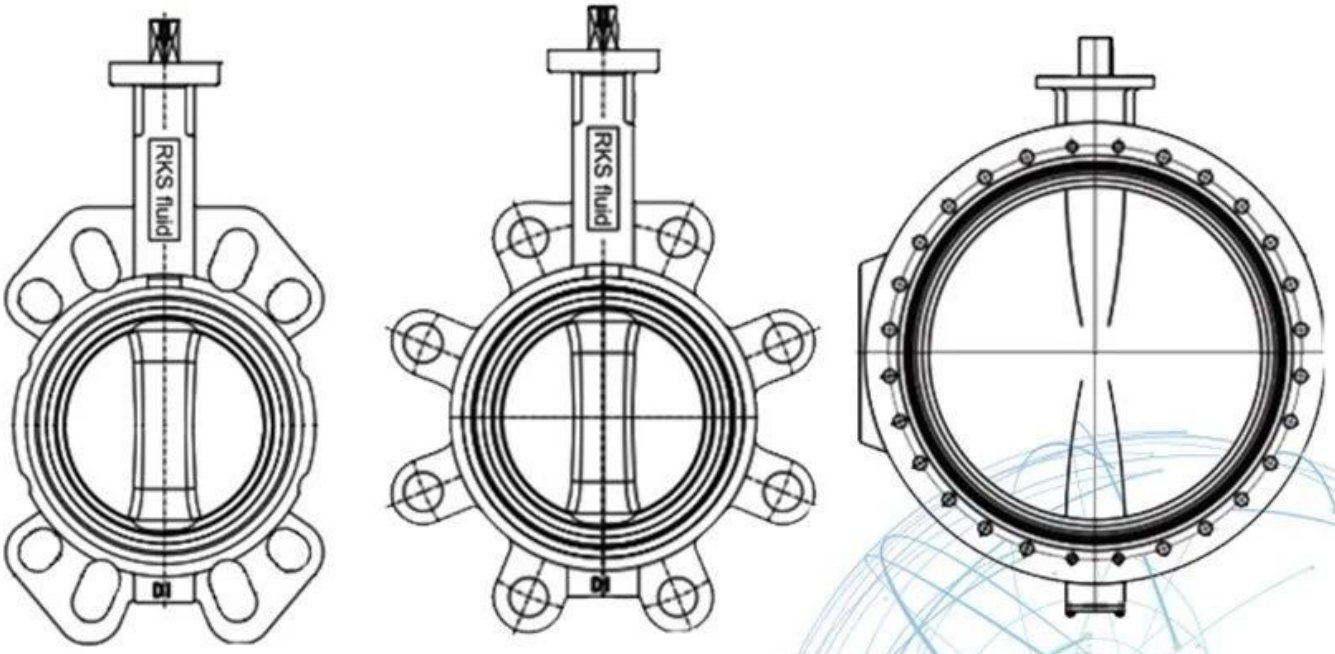

Application Scenario

Our Factory

Company Advantages

01 21 years of professional experience

02 4 factories

03 Independent research and development team
28 top senior professional researchers

04 2 professional testing centers

05 100% high level ex-factory inspection

06 High quality imported materials

07 2 years quality assurance, repair and replacement

RKSfluid □□□□□□□□□□□□□□□□ 1997 □□□□□□□□□□□□□□□□□□□□□□□□□□□□□□□□
□□ □□□□□□□
□□□□□□□□□□□□□□□□□□□ □□□□□□ □□
□□□□□□□□□□□□□
□□ □□□□□□□□□□□□□□□□□□□□□□□□□□□□□□
□□□□□□□□□□□□□□□□ □□□
□□□□□□□□□□□□□□□□□□□□□□ GB □□
□□□ □□□□□□□□□□□□□□□□□□□□□□
□□□ RKS
□□□□□□□□□□□□□□□□□□□□□□□□□□□□□□□□□□□□□□ □□□□□□□□□□□□□□□□□□□□□□□□□□ □□□□□□□□□□
□□□□□□□□□□□□□□□□□□□□□
□□□□□□□□□: GB, ISO, □□ TUV □□□□□□□ CE □□□
ADWO- 2000
ISO9001, TS, API □□□□□□□□□□□□□□□□: □□□□□□□□□□□□□□□□□, □□□□□□□□□□□□□□□□,
□□□□□□□□□□□□□□□□□□□□□□□□□ □□□□□□□□□□□□□□□□□□□□□□□□□□□□□□□□ □□□□□□□□□□
□□□□□□□: □□□□□□□, □□□□□□□□□, □□□□, □□□□□□, □□□□□□□□□□□, □□□□□□□□□□, □□□□□□□□□□□□□□□□
□□,
Tapping Saddles □□□
□□□□□□□□□□□□□□□□□ "□□□
□□□□□□□□□□□□" □□□□□□□□□□□□
□□□□□□□□□□□□□□□□□□□□□□□□ □□□!
RKSfluid □□□□□□□□□□□□□□□□ 1997
□□□□□□□□□□□□□□□□□□□□□□□□□□□□□□□
□□ □□□□□□□
□□□□□□□□□□□□□□□□□□□ □□□□□□ □□
□□□□□□□□□□□□□
□□ □□□□□□□□□□□□□□□□□□□□□□□□□□□□□□
□□□□□□□□□□□□□□□□ □□□
□□□□□□□□□□□□□□□□□□□□□□ GB □□
□□□ □□□□□□□□□□□□□□□□□□□□□□
□□□ RKS
□□□□□□□□□□□□□□□□□□□□□□□□□□□□□□□□□□□□□□ □□□□□□□□□□□□□□□□□□□□□□□□□□ □□□□□□□□□□

□□□□□□□□□□□□□□□□□□□□□□
□□□□□□□□□: GB, ISO, □□ TUV □□□□□□□ CE □□□
ADWO- 2000
ISO9001, TS, API □□□□□□□□□□□□□□□□: □□□□□□□□□□□□□□□□□□, □□□□□□□□□□□□□□□□□□,
□□□□□□□□□□□□□□□□□□□□□□□□□□ □□□□□□□□□□□□□□□□□□□□□□□□□□□□□□□□□□□ □□□□□□□□□□
□□□□□□□□: □□□□□□□□, □□□□□□□□□, □□□□, □□□□□□, □□□□□□□□□□□, □□□□□□□□□□, □□□□□□□□□□□□□□□□□
□□,
Tapping Saddles □□□
□□□□□□□□□□□□□□□□□□□ "□□
□□□□□□□□□□□□" □□□□□□□□□□□□□
□□□□□□□□□□□□□□□□□□□□□□□□□ □□□!
I□□□□□□□□□□□□□□: □□

II□□
□□□□□□□□□□□□□□□□□□□□□□□□□□□□□□

III□□□
□□□□□□□□□□

IV□□

V□□□□□□□□□□□□□□□□□□: GB, German Standard, American Standard, TUV CE, ISO 9001, ADWO-2000, TS, PED, WRC WRAS, KTW, API 6D, API609

VI □□□□□□□□□□□□: □□□□□□□□□□□□, □□□□□□□□, □□□□□□□□□□, □□□□□□□□□□□□, □□□□□□□□, □□□□□□□□ □□□, □□□□□□□□□□□□□□□□□□□ / □□□□□□□□ / □□□□□, □□□□□□□□□□□□□□

□□□□□□□□□□□□□□□

□□□: □□
□□□: □□□

□□□: □□□?
□□□: □□□□□□□□□, □□□□□, □□□□□□□□, □□□□□□□□□□□□□□ □□□□□□□□□□□□ RKSfluid □□□□□□□□□□□□□□□ □□□□□□□□□□□□ □□□□□□□□□□□□□□□□□□□□□□□□□□□

□□□: □□□□□□□□□□□□□□□□□□□□□□□□□□□□□□□□□□□□□?
□□□: RKSfluid □□

□□□: □□□□□□□□□□□□□□□□□
□□□: □□□□□□□□□□□□□□□□□□□□□□□□□□ 2 ~ 5 □□□□□□□□□ □□□□□□□□□□□□□□□□□□□□□□□□□□□□□□□□□□□□

□□□: MOQ
A: 1pc □□□□□□□□□□□□□□□□□□□□□□□

□□□: □□□□□□□□□□□□□□□□□□□□□□□□□□□□□□□?
A: □□□□□□□□□□□ 100% □□□□□□□□□□□□□□□□□□□□□ 2 □□ □□□□□□□□□□□□□□□□□□□□□□□□□□□□□□□□□□□□□□
□□
□□□□□□□□□□□□□□□□□□ TUV, API, WRAS, CE, ISO
□□□□□□□□□□□□□□□□□ DIN, ASME, BS EN, JIS, API, AWWA

[illegible]: [illegible]?
[illegible]: RKSfluid [illegible] 20 [illegible] R&D [illegible] 70 [illegible]
[illegible]