RKSfluid®
A key Valve in Flow Control
Butterfly Valve
Ball Valve
Gate Valve
Globe Valve
Check Valve
Pipe Fittings

DESIGN FEATURES

DURABLE

- **1 piece** non-welded **PFA** molded **DSS** Disc stem
- **Precision casting** WCB/CF8M Bodies

TRIPLE SEAL

- **Triple Seal**: Spring loaded Mechanical seal, Radial Lip Seal, FPM
- China **ONLY ONE** Manufacturer **400Mpa Isostatic pressing** PTFE seat, **consistent density**

ANTI-CORROSION

- **Material: Epoxy powder: AkzoNobel, Earth Best!**
- Coating Thickness: **200-250μm**
- Spraying temp: over **200℃**. Doesn't fade, even wipe with diethyl ether

QUALITY STANDARD

- **100% quality test**, follow DIN, ASTM, JIS, GB/T, ISO, BS EN, API
- **ONLY ONE** Manufacturer get **CE** certification up to **DN1800**
- **2 years** warranty. **15000** times On-off test, **30000** times Destructive experiment

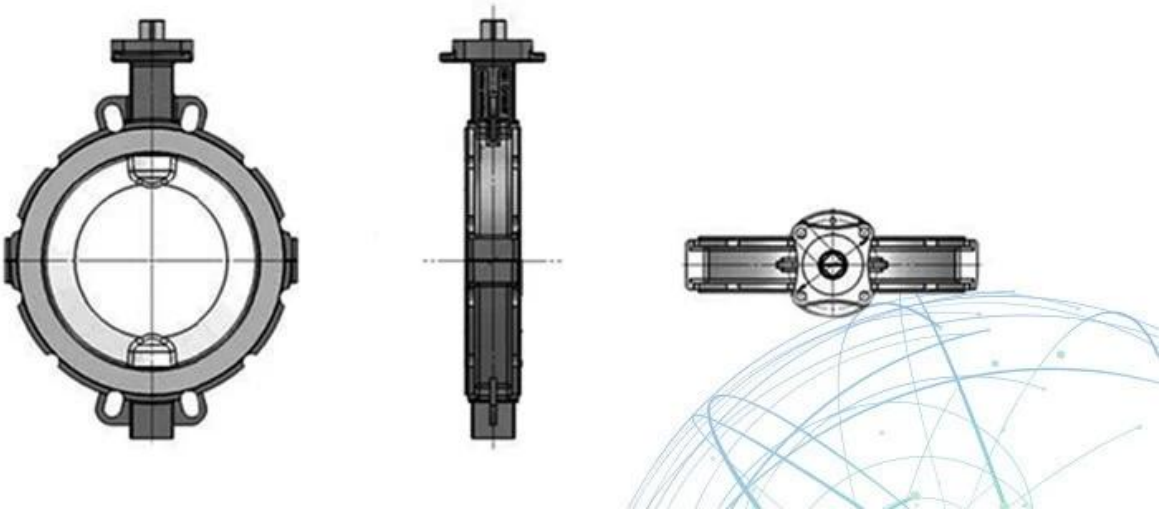

APPLICATION SCENARIO

Industrial water application | Nuclear plant | Petroleum | Steel | Wastewater treatment | Acid-base | Food | Irrigation

Our Factory

area □□□□□□□□□□□□□□: □□

centers □□

reference □□□

IV□□□

Standard □□□□□□□□□□□□□□□□□□□□□: GB, □□□□□□□□□□□□□□□□, □□□□□□□□□□□□□□□□□□□, TUV CE, ISO 9001,

ADWO-2000, TS, PED, WRC WRAS, KTW, API 6D, API609

VI □□□□□□□□□□□□: □□□□□□□□□□□□□, □□□□□□□□□, □□□□□□□□□□□, □□□□□□□□□□□□□, □□□□□□□□□, □□□□□□□□ □□□, □□□□□□ / □□□□□□□□□ / □□□□□□□□□□□□□□□□□, □□□□□□□□□□□□□□

Exhibition Photos

Our Certificates

[illegible]

[illegible]: [illegible]
[illegible]: [illegible]

[illegible]: [illegible]
A: [illegible], [illegible], Hrdraulic, [illegible] [illegible] RKSfluid [illegible] [illegible] [illegible]

Q: [illegible]
A: RKSfluid [illegible]

Q: [illegible]
A: [illegible] 2 ~ 5 [illegible] [illegible]

Q: [illegible]
A: 1 [illegible]

[illegible]: [illegible]
A: 100% [illegible] 2 [illegible] [illegible] [illegible]

[illegible] TUV, API, WRAS, CE, ISO [illegible]

[illegible] DIN, ASME, BS EN, JIS, API, AWWA

[illegible]: [illegible]
A: RKSfluid [illegible] 20 [illegible] 70 R & D [illegible] [illegible]