DESIGN FEATURES

DURABLE

- No-pin connection, 1 pc blow-out proof stem
- DI/CI Nodularity over 95%

ANTI-CORROSION

- Material: Epoxy powder: AkzoNobel, Earth Best!
- Coating Thickness: 200-250μm
- Spraying temp: over 200℃. Doesn't fade, even wipe with diethyl ether

QUALITY STANDARD

- 100% quality test, follow DIN, ASTM, JIS, GB/T, ISO, BS EN, API
- ONLY ONE Manufacturer get CE certification up to DN1800
- 2 years warranty. 15000 times On-off test, 30000 times Destructive experiment

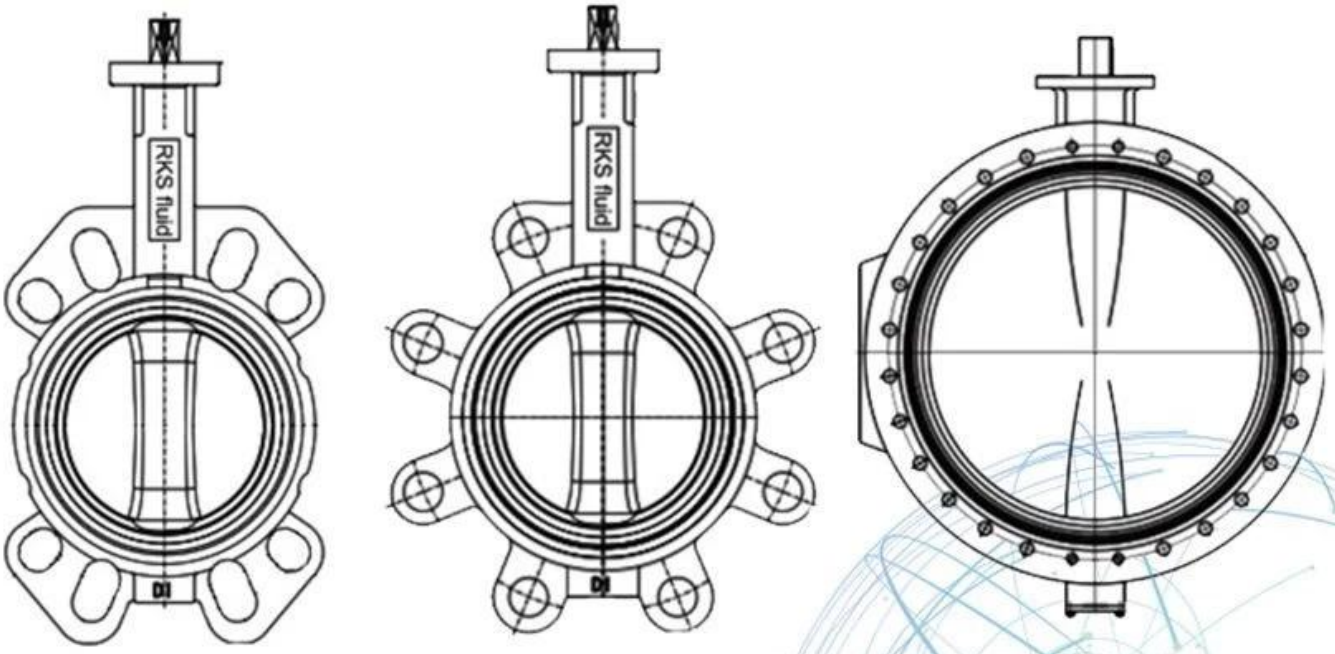

Application Scenario

Our Factory

Company Advantages

01 21 years of professional experience

02 4 factories

03 Independent research and development team
28 top senior professional researchers

04 2 professional testing centers

05 100% high level ex-factory inspection

06 High quality imported materials

07 2 years quality assurance, repair and replacement

area [illegible]: [illegible]

centers [illegible]

reference [illegible]

IV[illegible]

Standard [illegible]: GB, [illegible], [illegible], TUV CE, ISO 9001, ADWO-2000, TS, PED, WRC WRAS, KTW, API 6D, API609

VI [illegible]: [illegible], [illegible], [illegible], [illegible], [illegible], [illegible], [illegible] / [illegible] / [illegible], [illegible]

Exhibition Photos

Our Certificates

[illegible]

[illegible]: [illegible]
[illegible]: [illegible]

[illegible]: [illegible]

A: [illegible], [illegible], Hrdraulic, [illegible] [illegible] RKSfluid [illegible]

[illegible] [illegible]

Q: [illegible]

A: RKSfluid [illegible]

Q: [illegible]

A: [illegible] 2 ~ 5 [illegible] [illegible]

Q: [illegible]

A: 1 [illegible]

[illegible]: [illegible]

A: 100% [illegible] 2 [illegible] [illegible]

[illegible]

[illegible] TUV, API, WRAS, CE, ISO [illegible]

[illegible] DIN, ASME, BS EN, JIS, API, AWWA

[illegible]: [illegible]

A: RKSfluid [illegible] 20 [illegible] 70 [illegible]

[illegible]