https://www.alibaba.com/product-detail/Butterfly-valve-deck-plate-hastelloy-C_1600091155990.html?spm=a2747.manage.0.0.516371d27klALG

Resilient seat butterfly valve

PN10/PN16, ANSI 125LB/150LB,5K/10K
Size:DN25-DN2400
Body:DI CI
Disc: Stainless steel
Seat :EPDM, NBR, Viton
Connection: Wafer, Lug, Flange

Resilient seat butterfly valve

PN10/PN16, ANSI 125LB/150LB,5K/10K
Size:DN25-DN2400
Body:DI CI
Disc: DI+ Nylon
Seat :EPDM, NBR, Viton
Connection: Wafer, Lug, Flange

Resilient seat butterfly valve

PN10/PN16, ANSI 125LB/150LB,5K/10K
Size:DN25-DN2400
Body:DI CI
Disc: Stainless steel
Seat :EPDM, NBR, Viton
Connection: Wafer, Lug, Flange

Resilient seat butterfly valve

PN10/PN16, ANSI 125LB/150LB,5K/10K
Size:DN25-DN2400
Body:DI CI
Disc: Stainless steel
Seat :EPDM, NBR, Viton
Connection: Wafer, Lug, Flange

Double flange resilient seat butterfly valve

PN10/PN16, ANSI 125LB/150LB, 5K/10K
Size:DN50-DN1000
Body:DI CI
Disc: Stainless steel
Seat :EPDM, NBR, Viton
Connection: Flange

Short-neck butterfly valve for petroleum

ANSI 125LB/150LB
Top Flange Standard:ISO5211
Size:2"-12"
Body: DI CI
Disc :Stainless Steel
Seat : EPDM, NBR, Viton
Connection:Wafer, Lug

PTFE Butterfly Valve

BSEN 1092, DIN 2501, ANSI, JIS, AS2129
Size:DN50~DN600
Body:Ductile Iron
Disc:Ductile Iron+PTFE
Seat: PTFE
Connection: Wafer, Lug, Flange

PTFE Butterfly Valve

BSEN 1092, DIN 2501, ANSI, JIS, AS2129
Size: DN50~DN600
Body: Ductile Iron
Disc: Ductile Iron+PTFE
Seat: PTFE
Connection: Wafer, Lug, Flange

PTFE Butterfly Valve

BSEN 1092, DIN 2501, ANSI, JIS, AS2129
Size: DN50~DN600
Body: WCB, CF8, CF8M
Disc: CF8+PTFE, CF8M+PTFE
Seat: PTFE
Connection: Wafer, Lug

PTFE Butterfly Valve

BSEN 1092, DIN 2501, ANSI, JIS, AS2129
Size: DN50~DN600
Body: WCB, CF8, CF8M
Disc: CF8+PTFE, CF8M+PTFE
Seat: PTFE
Connection: Wafer, Lug

PTFE Butterfly Valve

BSEN 1092, DIN 2501, ANSI, JIS, AS2129
Size: DN50~DN600
Body: Ductile Iron
Disc: CF8 , CF8M
Seat: PTFE
Connection: Wafer, Lug, Flange

PTFE Butterfly Valve

BSEN 1092, DIN 2501, ANSI, JIS, AS2129
Size: DN50~DN600
Body: WCB
Disc: CF8 +PTFE, CF8 +PFA
Seat: PTFE
Connection: Wafer, Lug, Flange

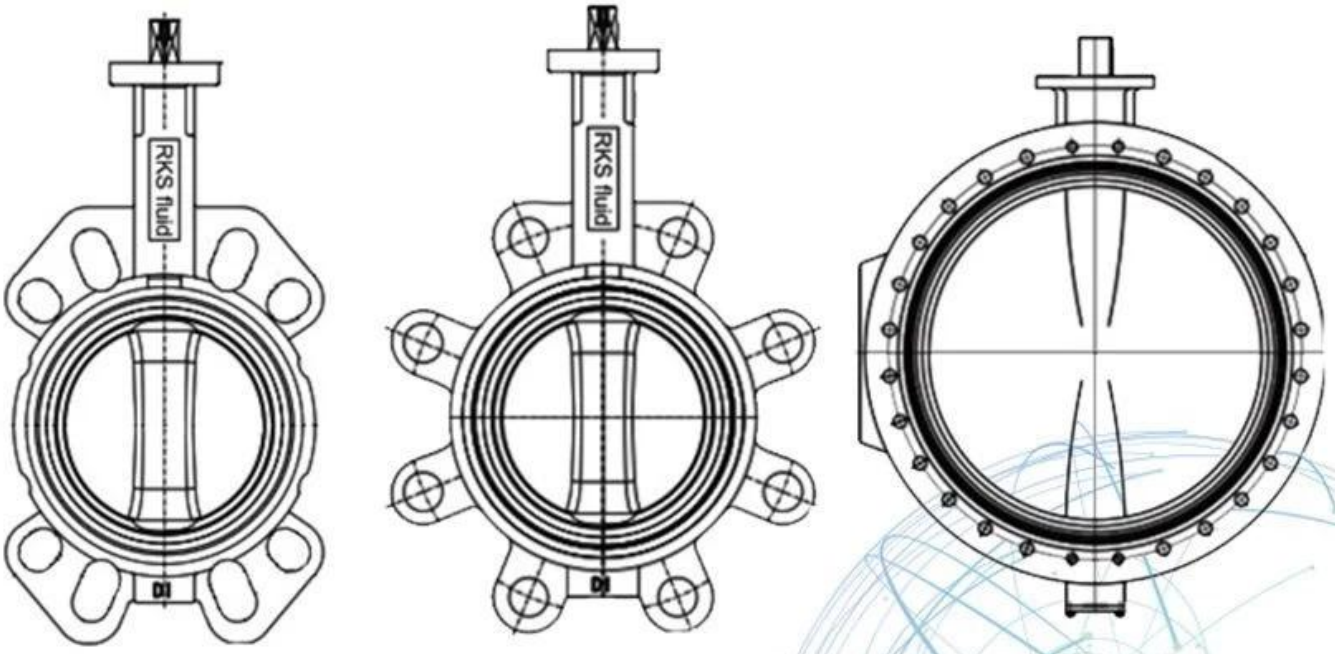

Application Scenario

Our Factory

Company Advantages

01 21 years of professional experience

02 4 factories

03 Independent research and development team
28 top senior professional researchers

04 2 professional testing centers

05 100% high level ex-factory inspection

06 High quality imported materials

07 2 years quality assurance, repair and replacement

RKSfluid □□□ 1997 □□□
□□□ □□□
□□□ □□□ □□□
□□□
□□□ □□□
□□□. □□□
□□□ GB □□□
□□□ □□□
□□□ RKS
□□□ □□□ □□□
□□□
□□□: GB, ISO, □□□ TUV □□□ CE
□□□ ADWO-2000
ISO9001, TS, API □□□: □□□
□□□ □□□ □□□
□□□: □□□, □□□, □□□, □□□, □□□, □□□, □□□
□□□,
Tapping Saddle: □□□
□□□ "□□□
□□□" □□□
□□□ □□□! RKSfluid
□□□ 1997
□□□
□□□ □□□
□□□ □□□ □□□
□□□
□□□ □□□
□□□. □□□
□□□ GB □□□
□□□ □□□
□□□ RKS
□□□ □□□ □□□

□□□□□□□□□□□□□□□□□□□□□□□□□□
□□□□□□□□□□□□□□□□: GB, ISO, □□□ TUV □□□□□□□□ CE □□□ ADWO-2000
ISO9001, TS, API □□□□□□□□□□□□□□□□□□□: □□ □□□□□□□□□□□□□□□□□□□□□□□□□□□□□□□ □□□□□□□□□□□□□□□□□□□□□□□□□□□□□□□□□□□□□ □□□□□□□□□□□□
□□□□□□□□: □□□□□□□□□, □□□□□□□□□□□, □□□□□, □□□□□□□, □□□□□□□□□□□□□□□, □□□□□□□□□□□□, □□□□□□□□□□□□□□□□□□□ □□□□□,
Tapping Saddle: □□□
□□□□□□□□□□□□□□□□□□□□□□ "□□ □□□□□□□□□□□□□□□□□" □□□□□□□□□□□□□□□□□□□
□□□□□□□□□□□□□□□□□□□□□□□□□□□□□□□□ □□!
□□□□□□□□□□□□□□□□□□□□□□□□□□: □□ □□□□□□□□□□□□□□□□□□□□□□□□□□

II□□□ □□□□□□□□□□□□□□□□□□□□□□□□□□□□□□□□

III□□ □□□□□□□□□□□□□□□□□□□□

IV□□□

□□□□□□□□□□□□□□□□□□□□□□ Prodotto: GB, □□□□□□□□□□□□□□□□□□□, □□□□□□□□□□□□□□□□□□□□□, TUV CE, ISO 9001, ADWO-2000, TS, PED, WRC WRAS, KTW, API 6D, API609

VI □□□□□□□□□□□□□□□: □□□□□□□□□□□□□□□, □□□□□□□□□□, □□□□□□□□□□□□□, □□□□□□□□□□□□□□□□□□□□□□□□, □□□□□□□□□□, □□□□□□□□□□□□□□, □□□□□□□□□□□□□□□□□□□□□□□□□□□ / □□□□□□□□□□□□ / □□□□□□□, □□□□□□□□□□□□□□□□□□□□

Exhibition Photos

□□□□□□□□□□□□□□□□□□

□□□: □□□
A: □□

□□□: □□□?
A: □□ □□□□□□□□□□□□□ RKSfluid □□□□□□□□□□□□□□□□□□□□□□□□ □□□□□□□□ □□□□□□□□□□□□□□□□□□□□□□□□□□□□□□□□□

□□□: □□□□□□□□□□□□□□□□□□□□□□□□□□□□□□□□□□?
□□□: RKSfluid □□□

□□□: □□□□□□□□□□□□□□□□□□□□
□□□: □□□□□□□□□□□□□□□□□□□□□□□□ 2 ~ 5 □□□□□□□□□□□ □□□□□□□□□□□□□□□□□□□□□□□□□□□□□□□□□□□□□□□

□□□: □□□□□□□□□
A: 1 □□□□□□□□□□□□□□□□□□□□□□□□□□□□□□□□□

□□□: □□□□□□□□□□□□□□□□□□□□□□□□□□□□□□□□□?
A: □□□□□□□□□□□□□ 100% □□□□□□□□□□□□□□□□□□□□□□ 2 □□ □□ □□□□□□□□□□□□□□□□□□□□□□ TUV, API, WRAS, CE, ISO
□□□□□□□□□□□□□□□□□□□ DIN, ASME, BS EN, JIS, API, AWWA

[illegible]: [illegible]?

[illegible]: RKSfluid [illegible] 20 [illegible] 70 [illegible]