RKSfluid®
A key Valve in Flow Control
Butterfly Valve
Ball Valve
Gate Valve
Globe Valve
Check Valve
Pipe Fittings

DESIGN FEATURES

DURABLE

- **1 piece** non-welded **PFA** molded **DSS** Disc stem
- **Precision casting** WCB/CF8M Bodies

TRIPLE SEAL

- **Triple Seal**: Spring loaded Mechanical seal, Radial Lip Seal, FPM
- China **ONLY ONE** Manufacturer **400Mpa Isostatic pressing** PTFE seat, **consistent density**

ANTI-CORROSION

- **Material: Epoxy powder: AkzoNobel, Earth Best!**
- Coating Thickness: **200-250μm**
- Spraying temp: over **200℃**. Doesn't fade, even wipe with diethyl ether

QUALITY STANDARD

- **100% quality test**, follow DIN, ASTM, JIS, GB/T, ISO, BS EN, API
- **ONLY ONE** Manufacturer get **CE** certification up to **DN1800**
- **2 years** warranty. **15000** times On-off test, **30000** times Destructive experiment

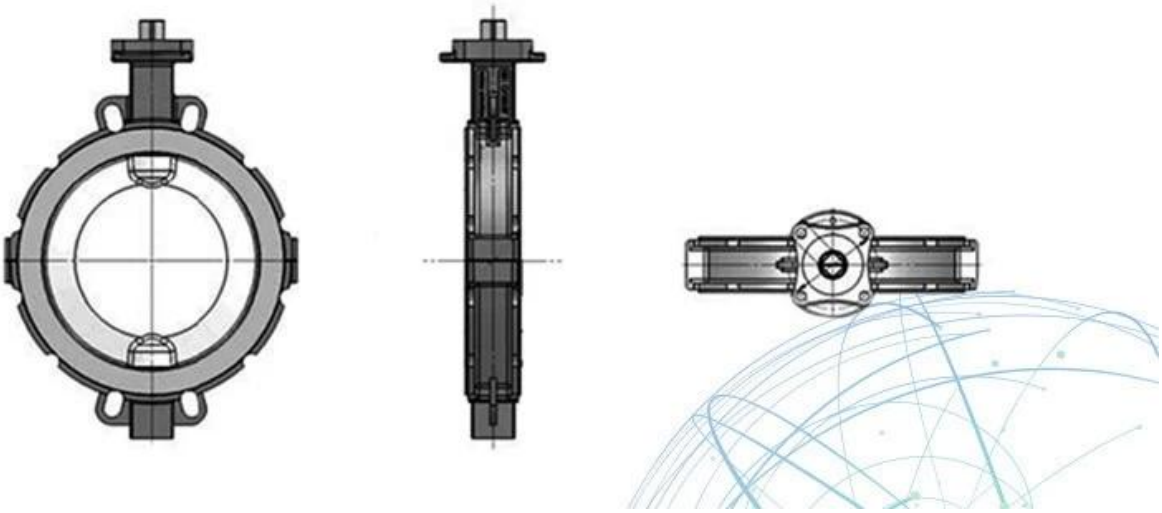

APPLICATION SCENARIO

Industrial water application | Nuclear plant | Petroleum | Steel | Wastewater treatment | Acid-base | Food | Irrigation

Our Factory

area □□□□□□□□□□□□□□: □□
□

II□□
□□□□□□□□□□□□□□□□□□□□□□□□□□□□□

reference □□
□□□□□□□□□□□□□□

IV□□

Standard □□□□□□□□□□□□□□□□□: GB, □□□□□□□□□□□□□□□, □□□□□□□□□□□□□□□□□□□, TUV CE, ISO 9001, ADWO-2000, TS, PED, WRC WRAS, KTW, API 6D, API609

VI □□□□□□□□□□□□: □□□□□□□□□□□□□, □□□□□□□□□, □□□□□□□□□□□□, □□□□□□□□□□□□□, □□□□□□□□□, □□□□□□□□□□□, □□□□□□ / □□□□□□□□□ / □□□□□□□□□□□□□□□□□□, □□□□□□□□□□□□□□

Exhibition Photos

□□□□□□□□□□□□□□□□□□

□□□: □□□
□□□: □□□

□□□: □□
A: □□□□□□□□□, □□□□□, Hrdraulic, □□□□□□□□□□□□□□□□ □□□□□□□□□□□□ RKSfluid □□□□□□□□□□□□□□□□□□ □□□□□□□□□□□□□□□□□□□ □□□□□□□□□□□□□□□□□□□□□□□□□□□□□□□□

Q: □□□□□□□□□□□□□□□□□□□□□□□□□□□□□□
A: RKSfluid □□□

Q: □□□□□□□□□□□□□□□□
A: □□□□□□□□□□□□□□□□□□□□□□□□□ 2 ~ 5 □□□□□□□□□□ □□

Q: □□□□□□□□□
A: 1 □□□□□□□□□□□□□□□□□□□□□□□□□□□□□□□

□□□: □□□□□□□□□□□□□□□□□□□□□□□□□□□□□□□□□□□□□
A: 100% □□□□□□□□□□□□□□□□□□□□□□□□□□□□□□□□□□ 2 □□ □□□□□□□□□□□□□□□□□□□□□□□□□□□□□□□□□□□□□□□ □□□□□□

□□□□□□□□□□□ TUV, API, WRAS, CE, ISO □□□□□□□

□□□□□□□□□□□□□□□□□□ DIN, ASME, BS EN, JIS, API, AWWA

[illegible]: [illegible]
A: RKSfluid [illegible] 20 [illegible] 70 [illegible]
[illegible]